Serial ATA
International Organization

Revision 1.0
27 July 2006

Serial ATA Interoperability Program
Device Mechanical MOI using Calipers

TABLE OF CONTENTS

REVISION HISTORY

Revision	Date	Comments
0.01	02/24/06	First Version describing use of Calipers for SATA-IO Logo Device Mechanical tests MDI-01, MDI-02, MDP-01.
0.9	03/02/06	Added Measurement Tolerance heading to each test.
1.0_RC	03/02/06	Incorporated feedback from SATA-IO Logo Group.
1.0	07/27/06	Final Release

ACKNOWLEDGMENTS

The Serial ATA Logo Group would like to acknowledge the efforts of the following individuals in the development of this document:

Eric Lee	Silicon Image, Inc	eric.lee@siliconimage.com
David Woolf	UNH-IOL	djwoolf@iol.unh.edu

INTRODUCTION

This Method of Implementation document is intended to provide a description of the motivation, resources, procedures, and methodologies specific to each test taken from the SATA-IO Interoperability Program. The tests described in this document are the SATA-IO Mechanical Device tests. This document describes how to perform these tests using a caliper and flat measurement surface.

REFERENCES

The following documents are referenced in this text:

[1] Serial ATA Revision 2.5
[2] SATA-IO Interoperability Program Policy Document Rev 1.0
[3] SATA-IO Interoperability Unified Test Document Rev 1.0

Test MDI-01 - Connector Location

Purpose: To verify that the location of the device plug connector relative to the device is within the conformance limits.

References:

[1] Serial ATA Revision 2.5 specification, section 6.1.2
[2] Serial ATA Interoperability Program Unified Test Document, v1.0, Section 2.8.1

Resource Requirements:

Calipers with:

Inner and outer measurement jaws

Note: jaws should have narrow tips, to measure some of the smaller features of the connector.

Depth measurement
Resolution <= 0.01 mm
Accuracy of +- 0.001” (+- 0.025 mm) or better
Locking screw to hold the caliper jaws at a fixed location.

Example Calipers are:

Mitutoyo model CD-6”CS, Code 500-196
Mitutoyo model 573-221-10, narrow jaw caliper

Flat Measurement Surface with holes.

Last Modification: February 24, 2006

Discussion: There are 6 device types covered by Reference [2]. For each device type there are 4 measurements to be taken to verify that the connector is properly located on the device. Reference [2] specifies which dimensions in reference [1] are to be measured.

Test Setup: See the Test Procedures below for each device type.

<u>For a 5.25" Optical Device:</u>

Test Procedure: Turn on the calipers, and verify the zero reading. Then perform the steps below to verify the following dimensions:

Measurement A: From the bottom surface of the drive to the top of the tongue of the SATA plug
Measurement B: Parallelism of the top of the tongue of the SATA plug vs. the bottom surface of the drive.

1. Place the drive on a flat surface, with the back surface of the drive (i.e. the "end of the device factor") lined up with the edge of the flat surface.
2. Using the outside measurement jaw of the calipers measure the thickness of the flat surface, record this value as *T*.
3. At the rightmost part of the plug (see Figure 1), measure the distance from the top of the tongue of the SATA plug to the bottom of the flat surface. Record this value as *T+A1*.
4. At the leftmost part of the plug (see Figure 1), measure the distance from the top of the tongue of the SATA plug to the bottom of the flat surface. Record this value as *T+A2*.
5. Determine the value of *A1* and *A2* using the formula *Ax= (T+Ax)-T*. Record the value of *A1* and *A2*.
6. Determine the value of *B* by using the formula *B = |A1-A2|*.

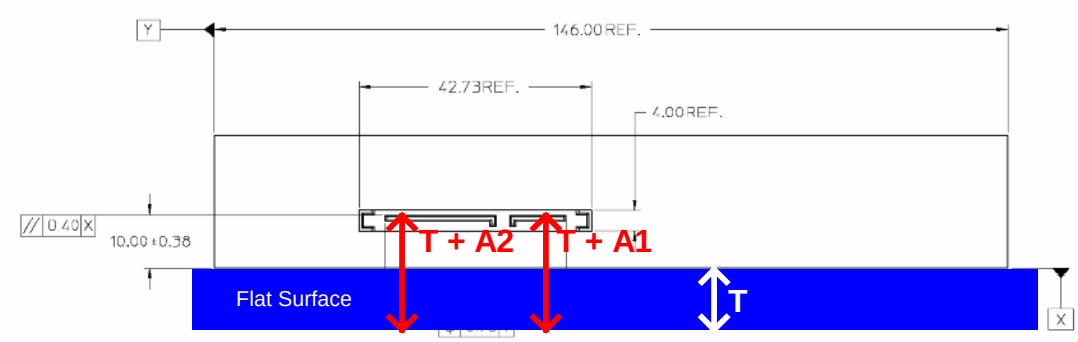

Figure 1

Measurement C: From the centerline of the drive to the centerline of the SATA plug.

1. Using the outside measurement jaw of the calipers measure the value of *C1* as shown in Figure 2. Record the value of *C1*.
2. Using the outside measurement jaw of the calipers measure the value of *C2* as shown in Figure 2. Record the value of *C2*.
3. Using the outside measurement jaw of the calipers measure the value of *C3*, the width of the device plug connector as shown in Figure 2. Record the value of *C3*.
4. Determine the value of *C* using the formula *C = (C1/2) – (C2 – (C3/2))*

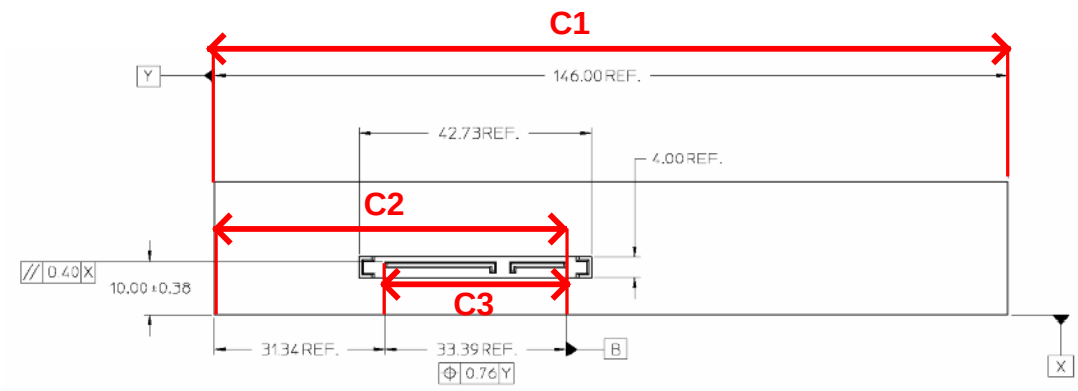

Figure 2

Measurement D: From the back surface of the drive (i.e. the "end of the device factor") to the base of the tongue of the SATA plug.

1. Using the outside measurement jaw of the calipers measure the thickness of the flat surface, record this value as *T*.
2. Place the drive against a flat surface, with the back surface of the drive (i.e. the "end of the device factor") flush against the face of the flat surface, see Figure 3.
3. Using the depth measurement of the caliper measure from the face of the flat surface, through a hole in the flat surface, to the back of the tongue of the connector plug, see Figure 3. Record this value as *T + D*.
4. Determine the value of *D* using the formula *D = (T+D)-T*.

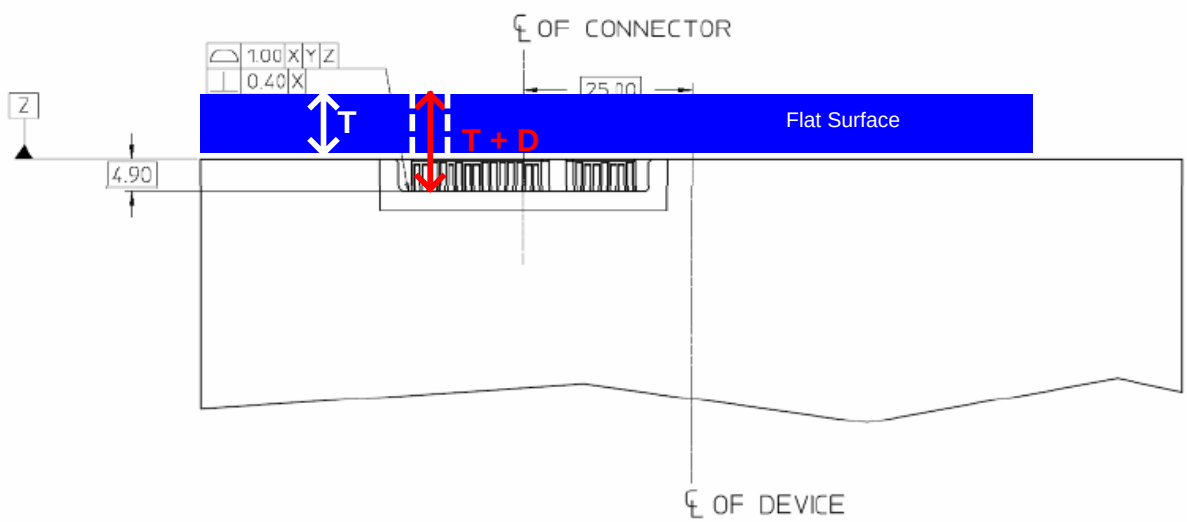

Figure 3

Observable Results:

- Verify that both Measurements A1 and A2 = 10.00 +- 0.38 mm
- Verify that Measurement B =< 0.40 mm
- Verify that Measurement C = 25.00 +- 0.38 mm
- Verify that Measurement D = 4.90 +- 0.50 mm

Measurement Tolerance: +/- .01 mm

Possible Problems: None.

<u>For a 5.25" non-optical device:</u>

Test Procedure: Turn on the calipers, and verify the zero reading. If the device follows section 6.1.2, Figure 18 of Reference [1] then use the Pass/Fail criteria for a "*5.25" optical drive*" outlined in the previous section. If the device does not follow section 6.1.2, Figure 18 then perform the steps below to verify the following dimensions:

Measurement A: From the bottom surface of the drive to the top of the tongue of the SATA plug
Measurement B: Parallelism of the top of the tongue of the SATA plug vs. the bottom surface of the drive.

1. Place the drive on a flat surface, with the back surface of the drive (i.e. the "end of the device factor") lined up with the edge of the flat surface.
2. Using the outside measurement jaw of the calipers measure the thickness of the flat surface, record this value as *T*.
3. At the rightmost part of the plug (see Figure 4), measure the distance from the top of the tongue of the SATA plug to the bottom of the flat surface. Record this value as *T+A1*.
4. At the leftmost part of the plug (see Figure 4), measure the distance from the top of the tongue of the SATA plug to the bottom of the flat surface. Record this value as *T+A2*.
5. Determine the value of *A1* and *A2* using the formula *Ax= (T+Ax)-T*. Record the value of *A1* and *A2*.
6. Determine the value of *B* by using the formula *B = |A1-A2|*.

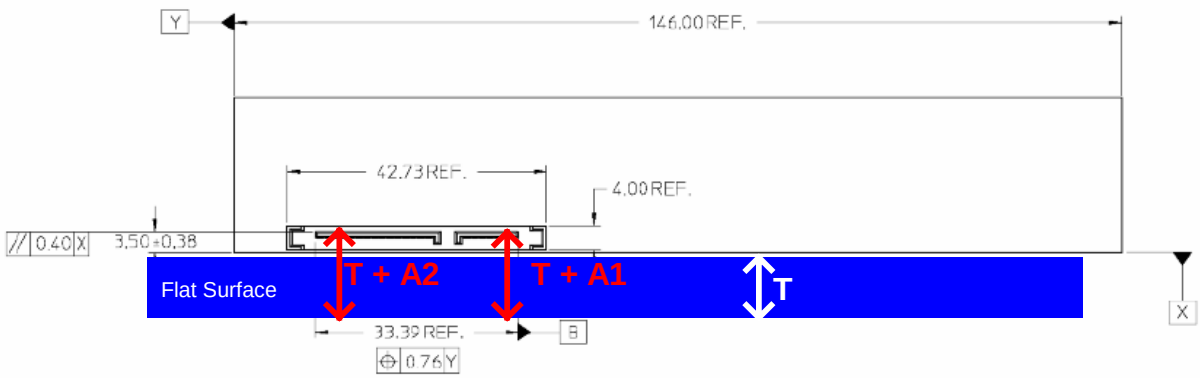

Figure 4

Measurement C: From the centerline of the drive to the centerline of the SATA plug.

1. Using the outside measurement jaw of the calipers measure the value of *C1* as shown in Figure 5. Record the value of *C1*.
2. Using the outside measurement jaw of the calipers measure the value of *C2* as shown in Figure 5. Record the value of *C2*.
3. Using the outside measurement jaw of the calipers measure the value of *C3*, the width of the device plug connector as shown in Figure 5. Record the value of *C3*.
4. Determine the value of *C* using the formula *C = (C1/2) – (C2 – (C3/2))*

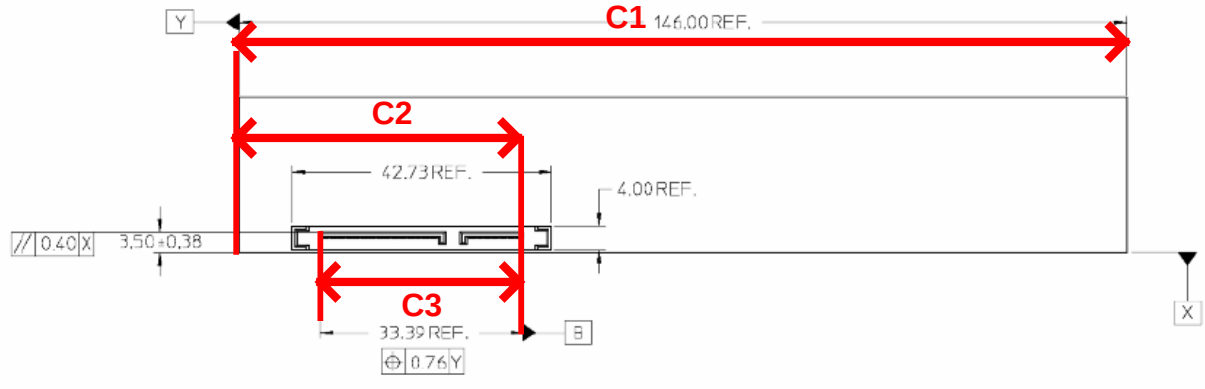

Figure 5

Measurement D: From the back surface of the drive (i.e. the "end of the device factor") to the base of the tongue of the SATA plug.

1. Using the outside measurement jaw of the calipers measure the thickness of the flat surface, record this value as *T*.
2. Place the drive against a flat surface, with the back surface of the drive (i.e. the "end of the device factor") flush against the face of the flat surface, see Figure 6.
3. Using the depth measurement of the caliper measure from the face of the flat surface, through a hole in the flat surface, to the back of the tongue of the connector plug, see Figure 6. Record this value as *T + D*.
4. Determine the value of *D* using the formula *D = (T+D)-T*.

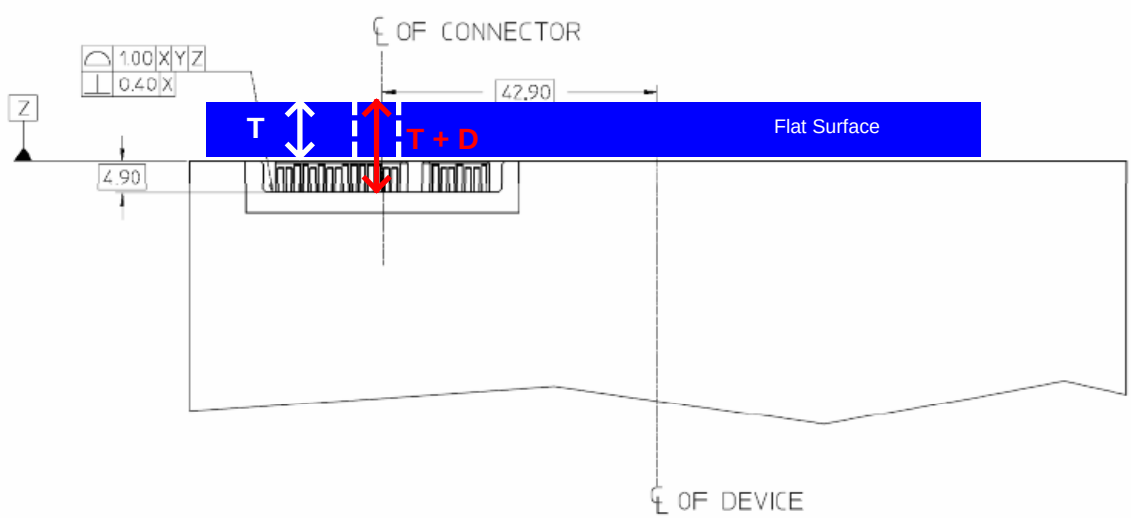

Figure 6

Observable Results:

- Verify that Measurement A = 3.50 +- 0.38 mm
- Verify that Measurement B =< 0.40 mm
- Verify that Measurement C = 42.90 +- 0.38 mm
- Verify that Measurement D = 4.90 +- 0.50 mm

Measurement Tolerance: +/- .01 mm

Possible Problems: None.

<u>For a 3.5" side mounted device:</u>

Test Procedure: Turn on the calipers, and verify the zero reading. Then perform the steps below to verify the following dimensions:

Measurement A: From the centerline of the mounting holes to the top of the tongue of the SATA plug.

1. Using the inside measurement jaws on the calipers, measure the width of the mounting hole as shown in Figure 7. Record this value as *A1*.
2. Place the device on the flat surface with the edge of the device with the measured mounting hole lined up with the edge of the flat surface.
3. Using the outside measurement jaws of the calipers, measure the distance from the edge of the mounting hole to the face of the flat surface, as shown in Figure 7. Record this value as *A2*.
4. Place the drive on a flat surface, with the back surface of the drive (i.e. the "end of the device factor") lined up with the edge of the flat surface.
5. Using the outside measurement jaws of the calipers, measure the distance from the top of the device tongue, to the face of the flat surface as shown in Figure 7. Record this value as *A3*.
6. Determine the value of measurement A with the formula $A = A3 - (A2 + (A1/2))$.

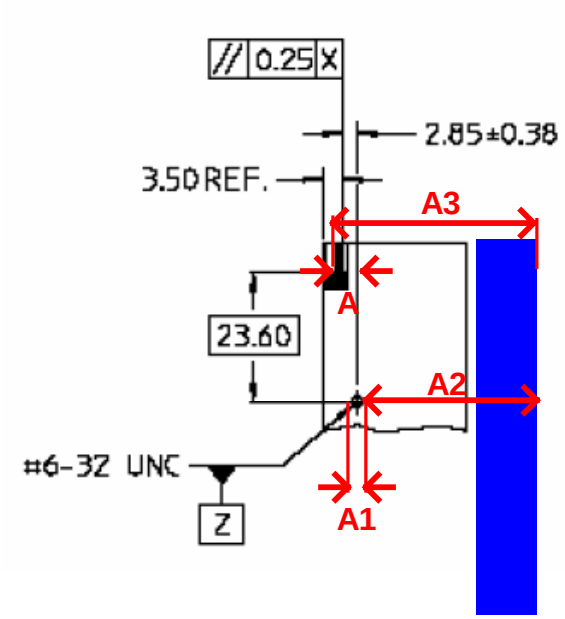

Figure 7

Measurement B: Parallelism of the top of the tongue of the SATA plug vs. the bottom surface of the drive.

1. Place the drive on a flat surface, with the back surface of the drive (i.e. the "end of the device factor") lined up with the edge of the flat surface.
2. Using the outside measurement jaw of the calipers measure the thickness of the flat surface, record this value as *T*.
3. At the rightmost part of the plug (see Figure 8), measure the distance from the top of the tongue of the SATA plug to the bottom of the flat surface. Record this value as *T+B1*.
4. At the leftmost part of the plug (see Figure 8), measure the distance from the top of the tongue of the SATA plug to the bottom of the flat surface. Record this value as *T+B2*.
5. Determine the value of *B* by using the formula $B = |B1-B2|$.

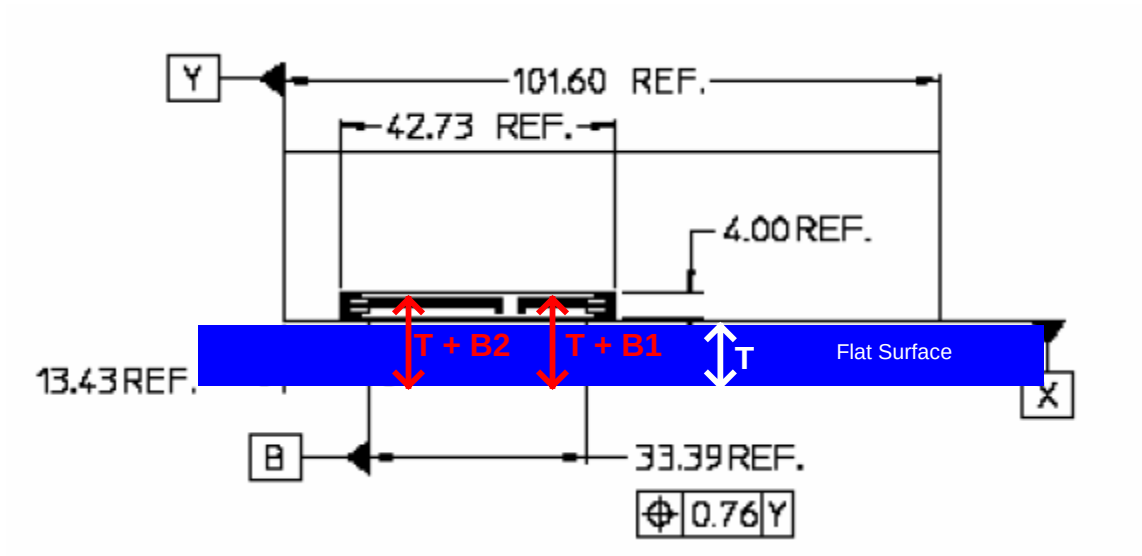

Figure 8

Measurement C: From the centerline of the drive to the centerline of the SATA plug.

1. Using the outside measurement jaw of the calipers measure the value of *C1* as shown in Figure 9. Record the value of *C1*.
2. Using the outside measurement jaw of the calipers measure the value of *C2* as shown in Figure 9. Record the value of *C2*.
3. Using the outside measurement jaw of the calipers measure the value of *C3*, the width of the device plug connector as shown in Figure 5. Record the value of *C3*.
4. Determine the value of *C* using the formula $C = (C1/2) - (C2 - (C3/2))$

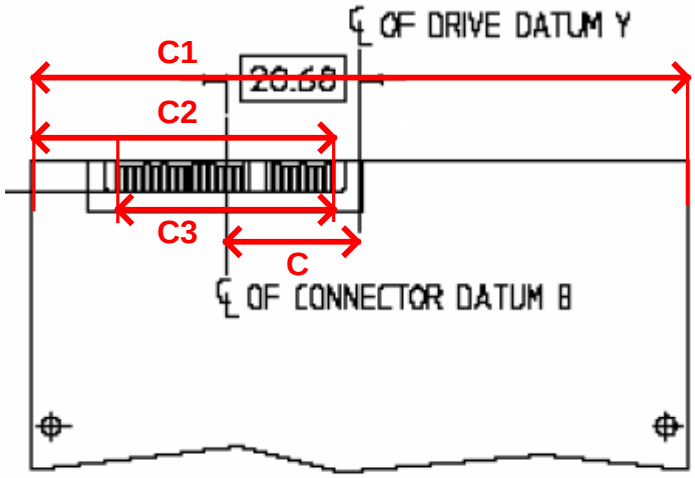

Figure 9

Measurement D: From the centerline of the mounting holes to the base of the tongue of the SATA plug.

1. Using the inside measurement jaw of the calipers measure the width of the mounting hole, record this value as *D1*.
2. Place the drive against a flat surface, with the back surface of the drive (i.e. the "end of the device factor") flush against the face of the flat surface, see Figure 10.
3. Using the outside measurement jaws of the calipers measure from the face of the flat surface to the edge of the mounting hole as seen in Figure 10. Record this measurement as *D2*.
4. Using the depth measurement of the caliper measure from the face of the flat surface, through a hole in the flat surface to the back of the tongue of the connector plug, see Figure 10. Record this value as *D3*.
5. Determine the value of *D* using the formula *D = (D2+(D1/2))-D3*.

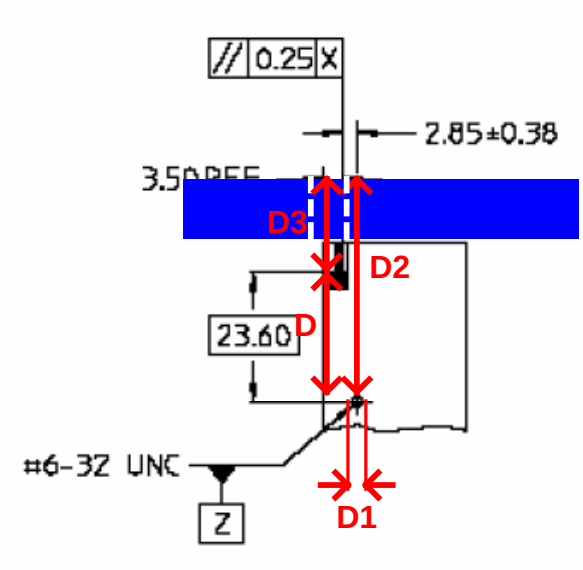

Figure 10

Observable Results:

- Verify that Measurement A = 2.85 +- 0.38 mm
- Verify that Measurement B =< 0.25 mm
- Verify that Measurement C = 20.68 +- 0.38 mm
- Verify that Measurement D = 23.60 +- 0.50 mm

Measurement Tolerance: +/- .01 mm

Possible Problems: None.

<u>For a 3.5" bottom mounted device:</u>

Test Procedure: Turn on the calipers, and verify the zero reading. Then perform the steps below to verify the following dimensions:

Measurement A: From the bottom surface of the drive to the top of the tongue of the SATA plug
Measurement B: Parallelism of the top of the tongue of the SATA plug vs. the bottom surface of the drive.

1. Place the drive on a flat surface, with the back surface of the drive (i.e. the "end of the device factor") lined up with the edge of the flat surface.
2. Using the outside measurement jaw of the calipers measure the thickness of the flat surface, record this value as *T*.
3. At the rightmost part of the plug (see Figure 11), measure the distance from the top of the tongue of the SATA plug to the bottom of the flat surface. Record this value as *T+A1*.
4. At the leftmost part of the plug (see Figure 11), measure the distance from the top of the tongue of the SATA plug to the bottom of the flat surface. Record this value as *T+A2*.
5. Determine the value of *A1* and *A2* using the formula *Ax= (T+Ax)-T*. Record the value of *A1* and *A2*.
6. Determine the value of *B* by using the formula *B* = |*A1-A2*|.

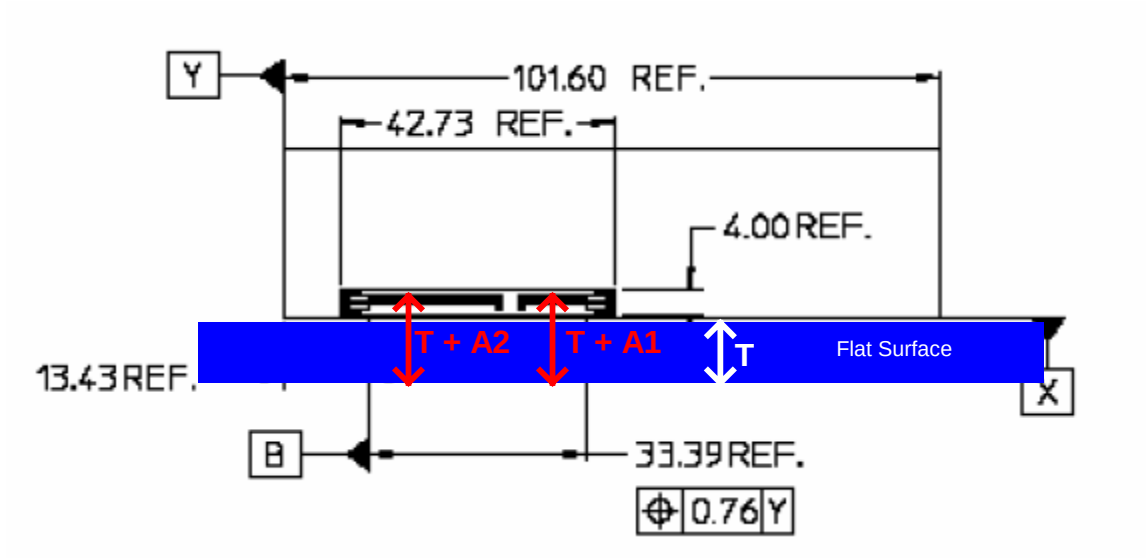

Figure 11

Measurement C: From the centerline of the drive to the centerline of the SATA plug.

1. Using the outside measurement jaw of the calipers measure the value of *C1* as shown in Figure 12. Record the value of *C1*.
2. Using the outside measurement jaw of the calipers measure the value of *C2* as shown in Figure 12. Record the value of *C2*.
3. Using the outside measurement jaw of the calipers measure the value of *C3*, the width of the device plug connector as shown in Figure 5. Record the value of *C3*.
4. Determine the value of *C* using the formula $C = (C1/2) – (C2 – (C3/2))$

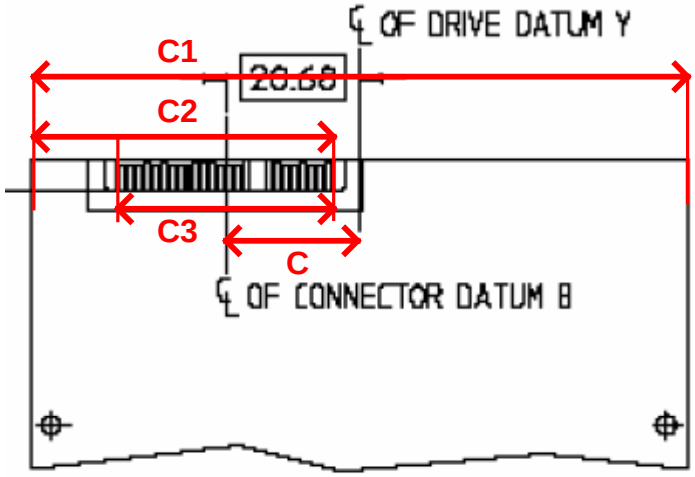

Figure 12

Measurement D: From the centerline of the mounting holes to the base of the tongue of the SATA plug.

1. Using the inside measurement jaw of the calipers measure the width of the mounting hole as shown in Figure 13. Record the value of *D1*.
2. Using the outside measurement jaw of the calipers measure the distance from the edge of the mounting hole to the face of the flat surface as shown in Figure 13. Record the value of *D2*.
3. Using the depth measurement of the calipers measure the distance from the face of the flat surface, through a hole in the flat surface, to the base of the device tongue plug as shown in Figure 13. Record this value as D3.
4. Determine the value of *D* using the formula D *=(D2 + D1/2))-D3*

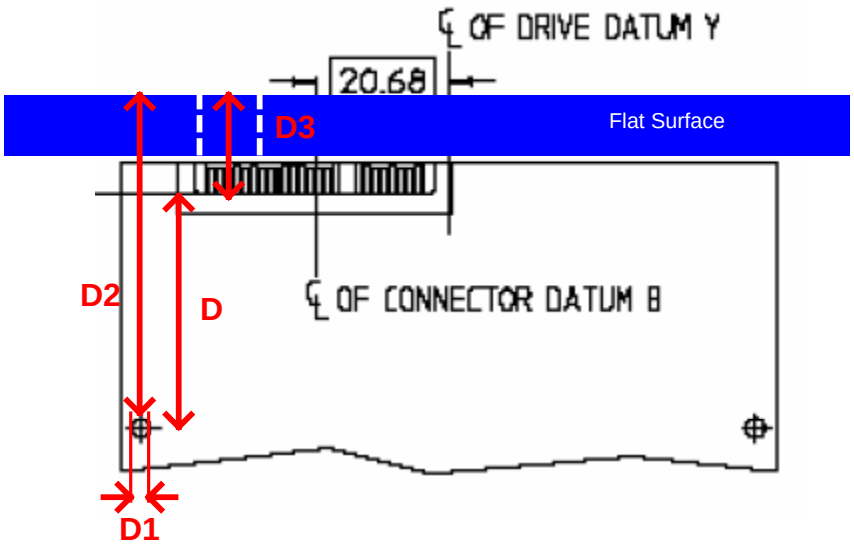

Figure 13

Observable Results:

- Verify that Measurement A = 3.50 +- 0.38 mm
- Verify that Measurement B =< 0.25 mm
- Verify that Measurement C = 20.68 +- 0.38 mm
- Verify that Measurement D = 36.38 +- 0.50 mm

Measurement Tolerance: +/- .01 mm

Possible Problems: None.

<u>For a 2.5" side mounted device:</u>

Test Procedure: Turn on the calipers, and verify the zero reading. Then perform the steps below to verify the following dimensions:

Measurement A: From the centerline of the mounting holes to the top of the tongue of the SATA plug.

1. Using the inside measurement jaws on the calipers, measure the width of the mounting hole as shown in Figure 14. Record this value as *A1*.
2. Place the device on the flat surface with the edge of the device with the measured mounting hole lined up with the edge of the flat surface.
3. Using the outside measurement jaws of the calipers, measure the distance from the edge of the mounting hole to the face of the flat surface, as shown in Figure 14. Record this value as *A2*.
4. Place the drive on a flat surface, with the back surface of the drive (i.e. the "end of the device factor") lined up with the edge of the flat surface.
5. Using the outside measurement jaws of the calipers, measure the distance from the top of the device tongue, to the face of the flat surface as shown in Figure 14. Record this value as *A3*.
6. Determine the value of measurement A with the formula $A = A3 - (A2 + (A1/2))$.

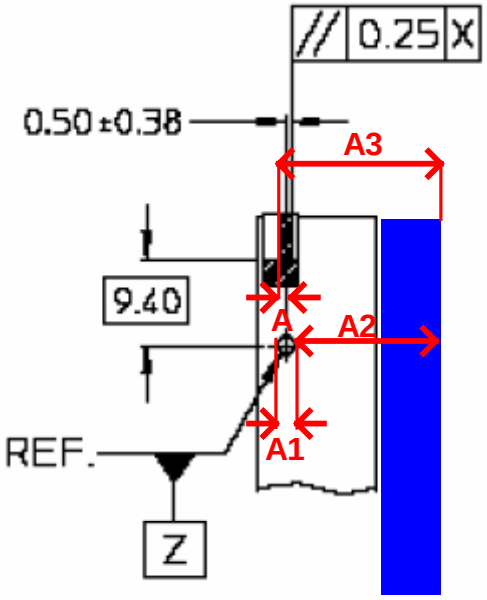

Figure 14

Measurement B: Parallelism of the top of the tongue of the SATA plug vs. the bottom surface of the drive.

1. Place the drive on a flat surface, with the back surface of the drive (i.e. the "end of the device factor") lined up with the edge of the flat surface.
2. Using the outside measurement jaw of the calipers measure the thickness of the flat surface, record this value as *T*.
3. At the rightmost part of the plug (see Figure 15), measure the distance from the top of the tongue of the SATA plug to the bottom of the flat surface. Record this value as *T+B1*.
4. At the leftmost part of the plug (see Figure 15), measure the distance from the top of the tongue of the SATA plug to the bottom of the flat surface. Record this value as *T+B2*.
5. Determine the value of *B* by using the formula $B = |B1-B2|$.

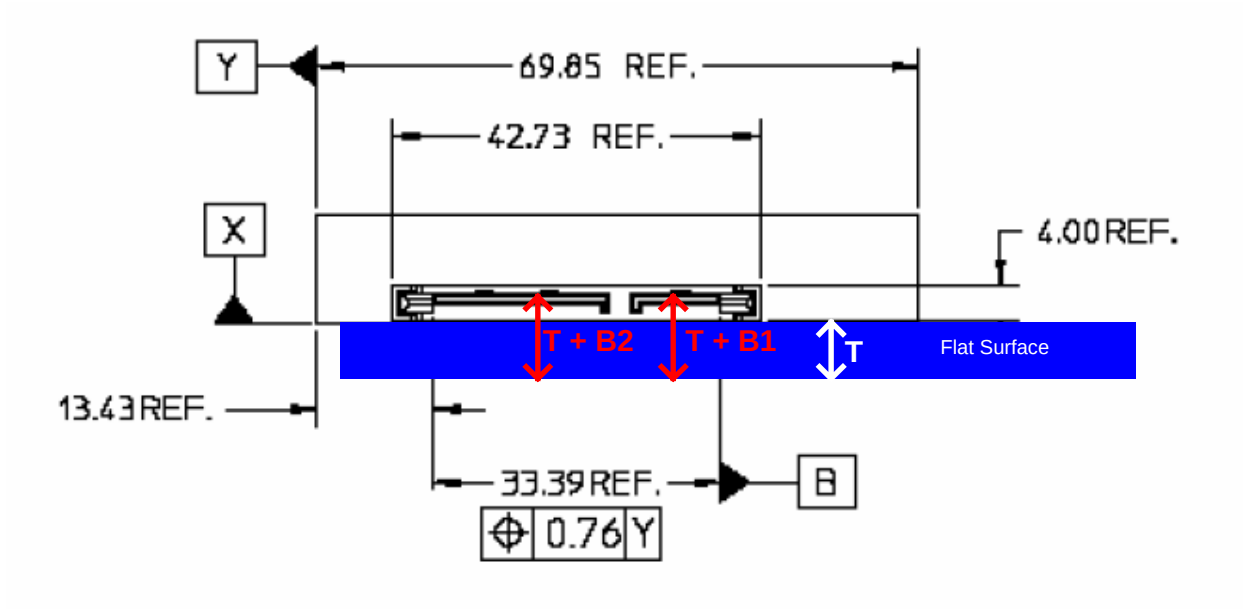

Figure 15

Measurement C: From the centerline of the drive to the centerline of the SATA plug.

1. Using the outside measurement jaw of the calipers measure the value of *C1* as shown in Figure 16. Record the value of *C1*.
2. Using the outside measurement jaw of the calipers measure the value of *C2* as shown in Figure 16. Record the value of *C2*.
3. Using the outside measurement jaw of the calipers measure the value of *C3*, the width of the device plug connector as shown in Figure 16. Record the value of *C3*.
4. Determine the value of *C* using the formula $C = (C1/2) - (C2 - (C3/2))$

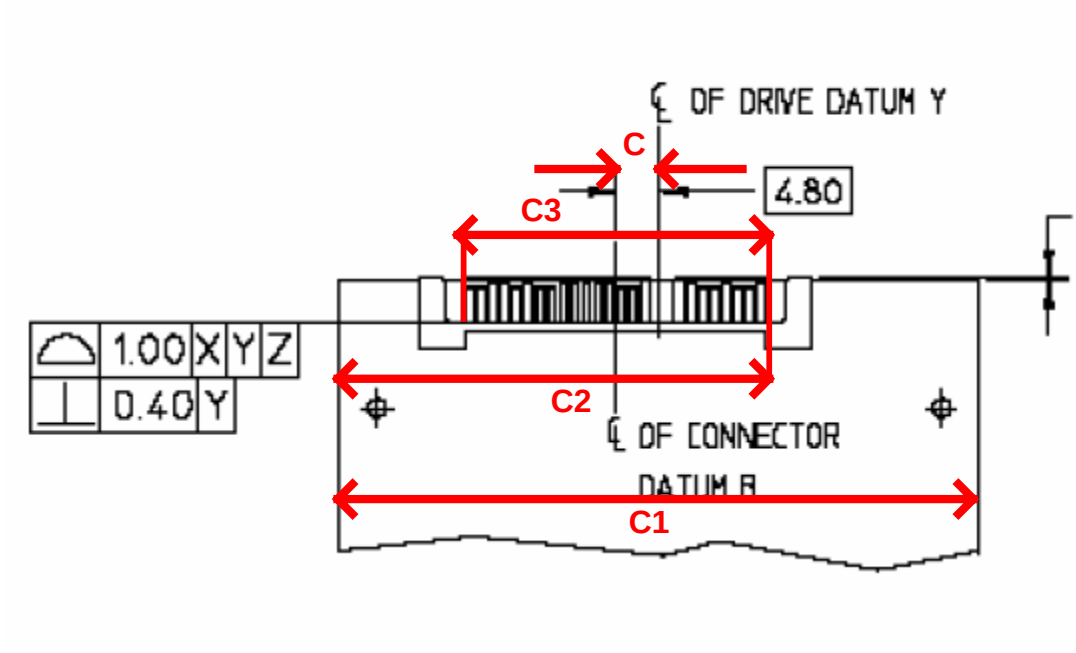

Figure 16

Measurement D: From the centerline of the mounting holes to the base of the tongue of the SATA plug.

1. Using the inside measurement jaw of the calipers measure the width of the mounting hole, record this value as *D1*.
2. Place the drive against a flat surface, with the back surface of the drive (i.e. the "end of the device factor") flush against the face of the flat surface, see Figure 17.
3. Using the outside measurement jaws of the calipers measure from the face of the flat surface to the edge of the mounting hole as seen in Figure 17. Record this measurement as *D2*.
4. Using the depth measurement of the caliper measure from the face of the flat surface, through a hole in the flat surface to the back of the tongue of the connector plug, see Figure 17. Record this value as *D3*.
5. Determine the value of *D* using the formula *D = (D2+(D1/2))-D3*.

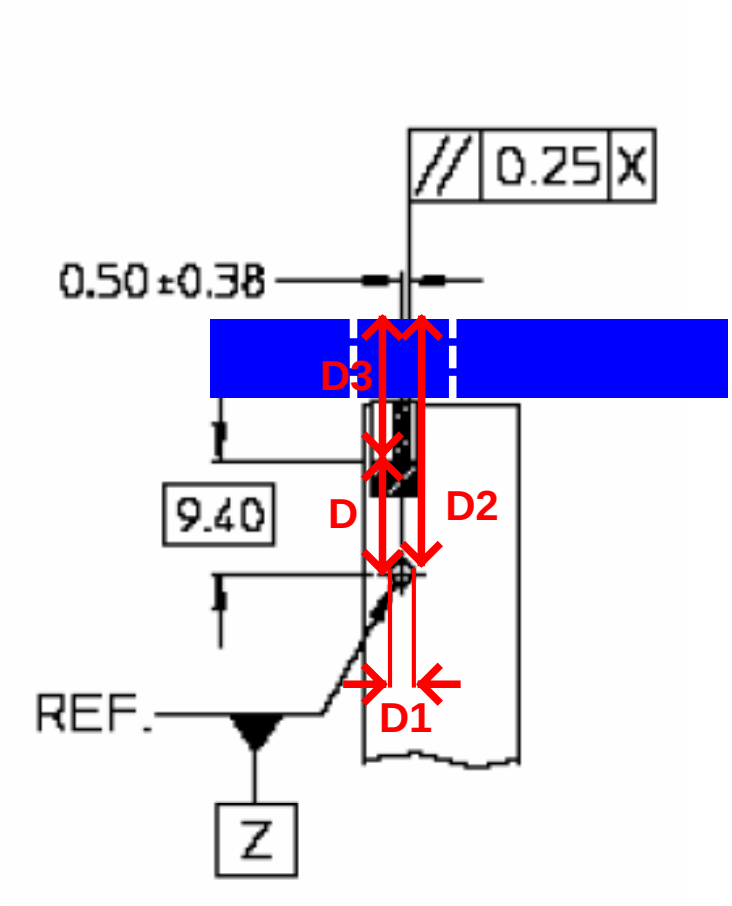

Figure 17

Observable Results:

- Verify that Measurement A = 0.50 +- 0.38 mm
- Verify that Measurement B =< 0.25 mm
- Verify that Measurement C = 4.80 +- 0.38 mm
- Verify that Measurement D = 9.40 +- 0.50 mm

Measurement Tolerance: +/- .01 mm

Possible Problems: None.

<u>For a 2.5" bottom mounted device:</u>

Test Procedure: Turn on the calipers, and verify the zero reading. Then perform the steps below to verify the following dimensions:

Measurement A: From the bottom surface of the drive to the top of the tongue of the SATA plug.
Measurement B: Parallelism of the top of the tongue of the SATA plug vs. the bottom surface of the drive.

1. Place the drive on a flat surface, with the back surface of the drive (i.e. the "end of the device factor") lined up with the edge of the flat surface, see Figure 18.
2. Using the outside measurement jaw of the calipers measure the thickness of the flat surface, record this value as *T*.
3. At the rightmost part of the plug (see Figure 18), measure the distance from the top of the tongue of the SATA plug to the bottom of the flat surface. Record this value as *T+A1*.
4. At the leftmost part of the plug (see Figure 18), measure the distance from the top of the tongue of the SATA plug to the bottom of the flat surface. Record this value as *T+A2*.
5. Determine the value of *A1* and *A2* using the formula *Ax= (T+Ax)-T*. Record the value of *A1* and *A2*.
6. Determine the value of *B* by using the formula *B* = |*A1-A2*|.

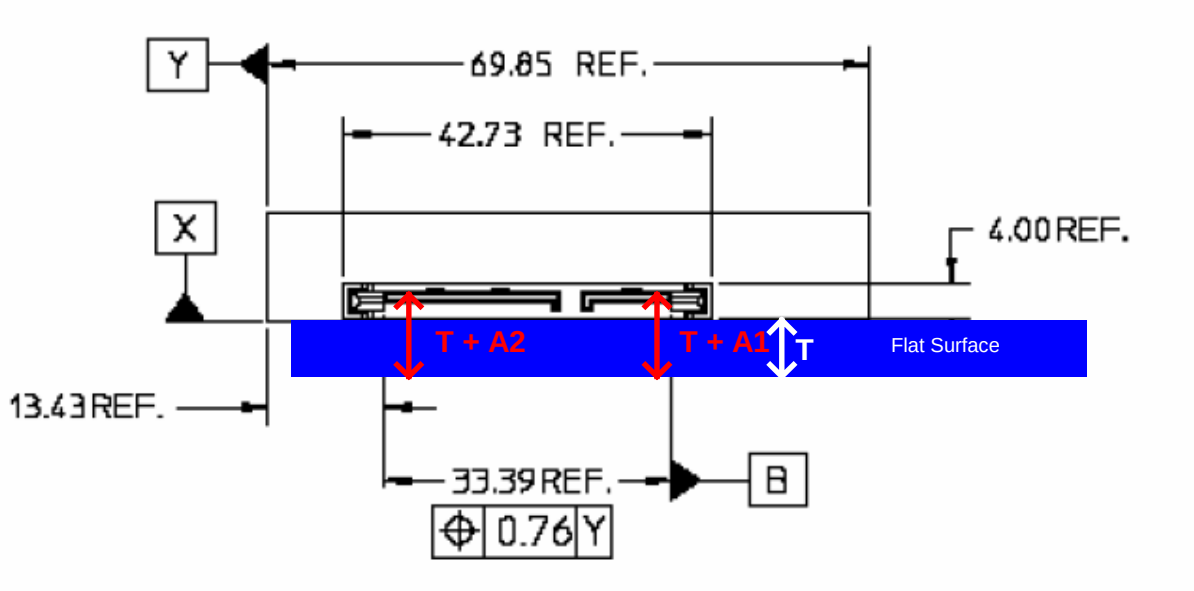

Figure 18

Measurement C: From the centerline of the drive to the centerline of the SATA plug.

1. Using the outside measurement jaw of the calipers measure the value of *C1* as shown in Figure 19. Record the value of *C1*.
2. Using the outside measurement jaw of the calipers measure the value of *C2* as shown in Figure 19. Record the value of *C2*.
3. Using the outside measurement jaw of the calipers measure the value of *C3*, the width of the device plug connector as shown in Figure 19. Record the value of *C3*.
4. Determine the value of *C* using the formula *C = (C1/2) – (C2 – (C3/2))*

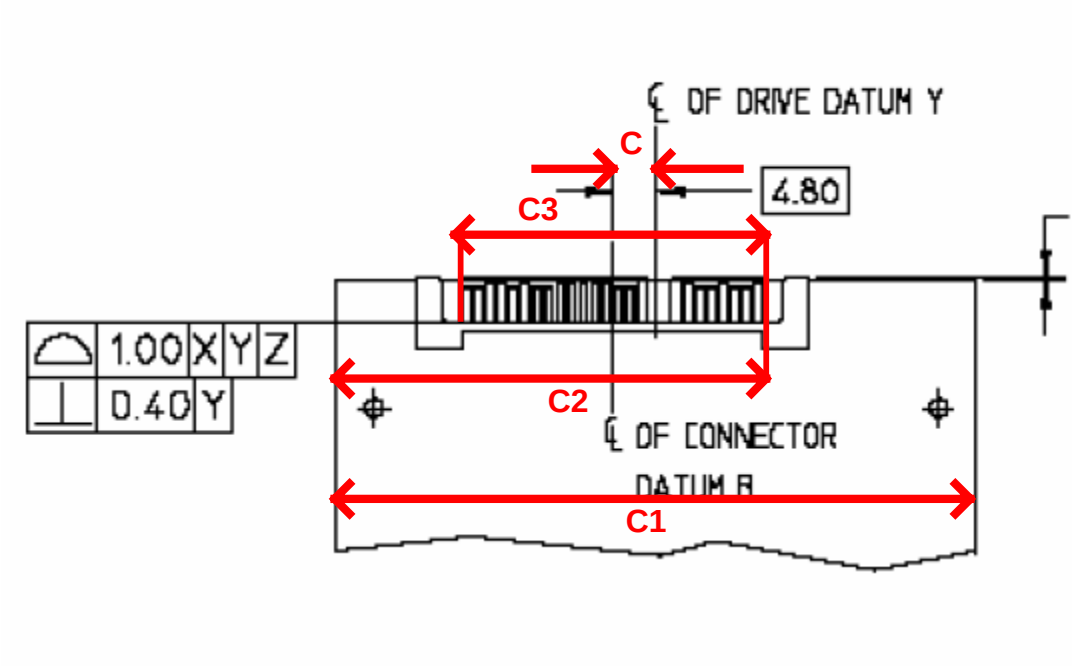

Figure 19

Measurement D: From the centerline of the mounting holes to the base of the tongue of the SATA plug.

1. Using the inside measurement jaw of the calipers measure the width of the mounting hole as shown in Figure 20. Record the value of *D1*.
2. Using the outside measurement jaw of the calipers measure the distance from the edge of the mounting hole to the face of the flat surface as shown in Figure 20. Record the value of *D2.*
3. Using the depth measurement of the calipers measure the distance from the face of the flat surface, through a hole in the flat surface, to the base of the device tongue plug as shown in Figure 20. Record this value as D3.
4. Determine the value of *D* using the formula D *=(D2 + D1/2))-D3*

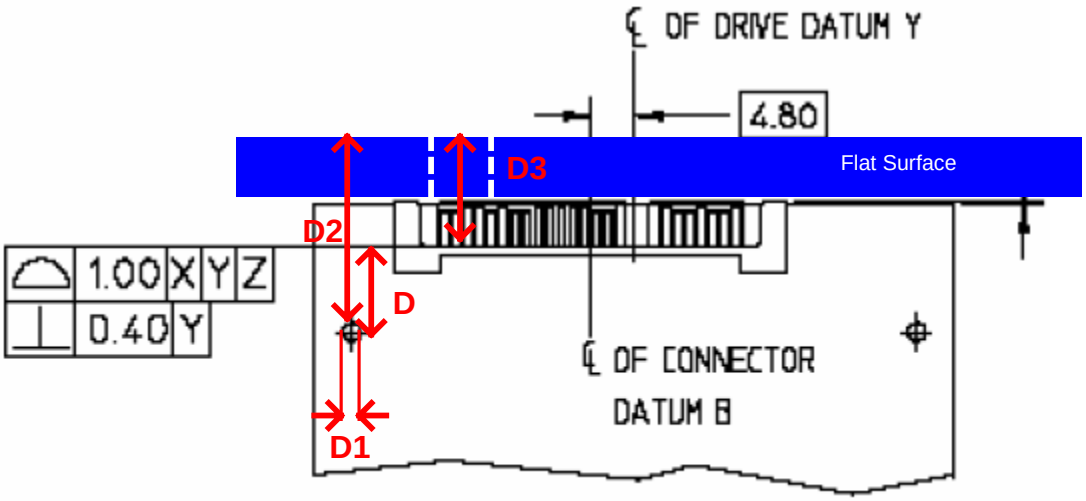

Figure 20

Observable Results:

- Verify that Measurement A = 3.50 +- 0.38 mm
- Verify that Measurement B =< 0.25 mm
- Verify that Measurement C = 4.80 +- 0.38 mm
- Verify that Measurement D = 9.40 +- 0.50 mm

Measurement Tolerance: +/- .01 mm

Possible Problems: None.

Test MDI-02 - Visual and Dimensional Inspections

Purpose: To verify that the device connector plug is within the conformance limits.

References:

[1] Serial ATA Revision 2.5 specification, section 6.1.10.2, 6.1.3.1
[2] Serial ATA Interoperability Program Unified Test Document, v1.0, Section 2.8.2

Resource Requirements:

Calipers with
- Inner and outer measurement jaws
  - Note: jaws should have narrow tips, to measure some of the smaller features of the connector.
- Resolution <= 0.01 mm
- Accuracy of +- 0.001" (+- 0.025 mm) or better
- Locking screw to hold the caliper jaws at a fixed location.

Example Calipers are:
- Mitutoyo model CD-6"CS, Code 500-196
- Mitutoyo model 573-221-10, narrow jaw caliper

Last Modification: February 24, 2006

Discussion: These tests verify that the device connector plug is properly constructed and meets the dimensional specifications of Reference [1]. Reference [2] specifies which dimensions in reference [1] are to be measured.

Test Setup: See the Test Procedures below.

Test Procedure:
Turn on the calipers, and verify the zero reading. Then perform the steps below to verify the following dimensions:

Measurement A: The thickness of the device plug tongue shall be 1.23 +-0.05 mm.

1. Using the outside measurement jaws of the calipers measure the thickness of the device plug tongue as shown in Figure 21. Perform a measurement sweep along the length of the connector, not just in one place. This will account for any variations in the connector. Record the worst-case measured value as *A*.

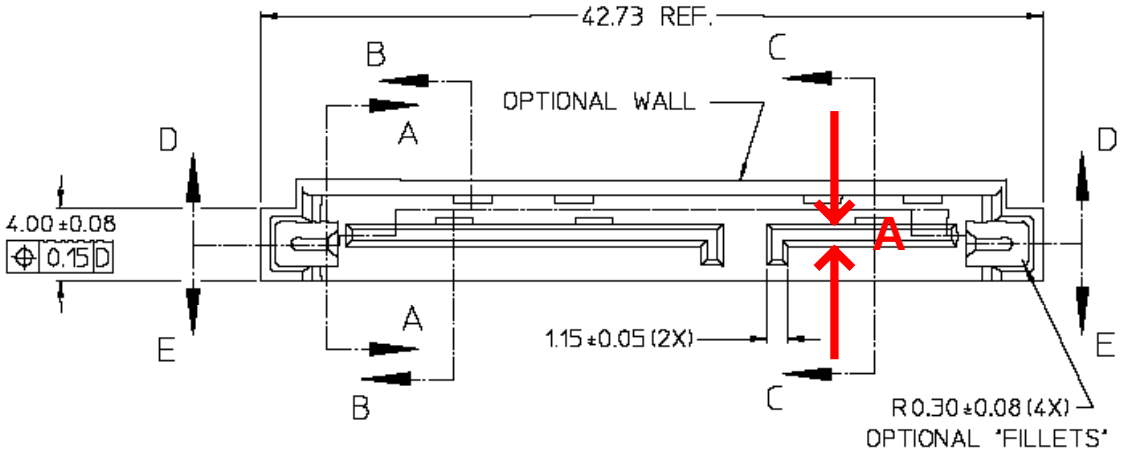

Figure 21

Measurement B: If the "Optional Wall" of Figure 28 from Reference [1] is present than the distance from the device plug tongue to the wall shall be 1.58 +- 0.08 mm. If the "Optional Wall" of Figure 28 from Reference [1] is not present than there shall be a minimum of a 1.5 mm keep out zone from Datum A of Figure 26 from Reference [1] to the nearest obstruction.

1. Using the inside measurement jaws of the calipers measure the distance between the device plug tongue and the Optional Wall or nearest obstruction, as indicated in Figure 22. Perform a measurement sweep along the length of the connector, not just in one place. This will account for any variations in the connector. Record the worst-case measured value as *B*.

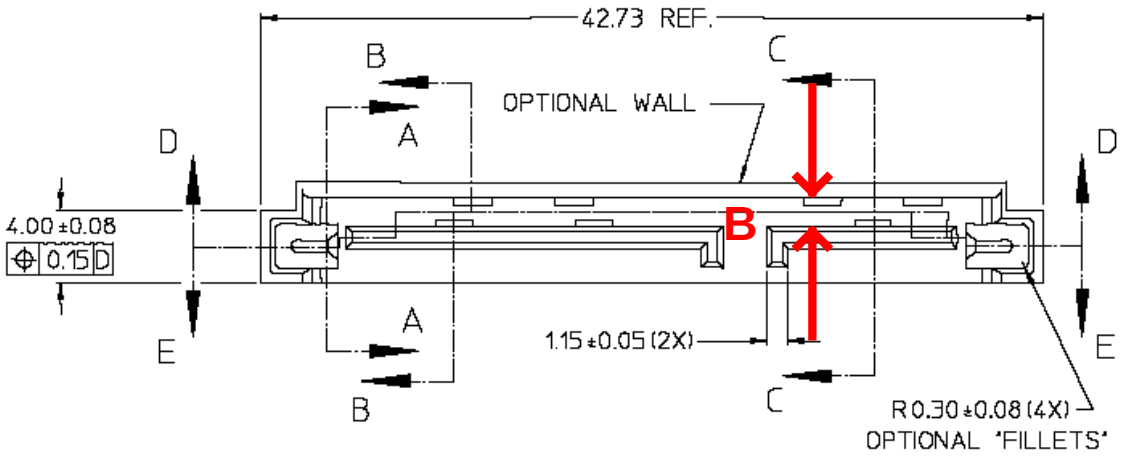

Figure 22

Measurement C: The combined width of the power and signal segments shall be 33.39 +- 0.08 mm.

1. Using the outside measurement jaws of the calipers measure the total width of the signal and power elements of the device plug connector as shown in Figure 23. Record the measured value as *C*.

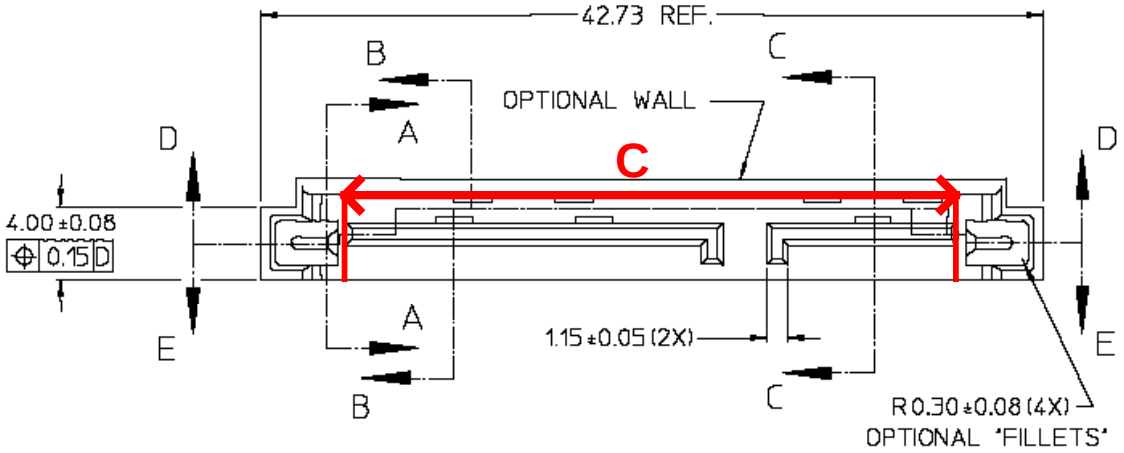

Figure 23

Measurement D: The separation between the power and signal elements shall be 2.41 +- 0.05 mm.

1. Using the inside measurement jaws of the calipers measure the width of the space between the signal and power elements of the device plug connector as shown in Figure 24. Record the measured value as *D*.

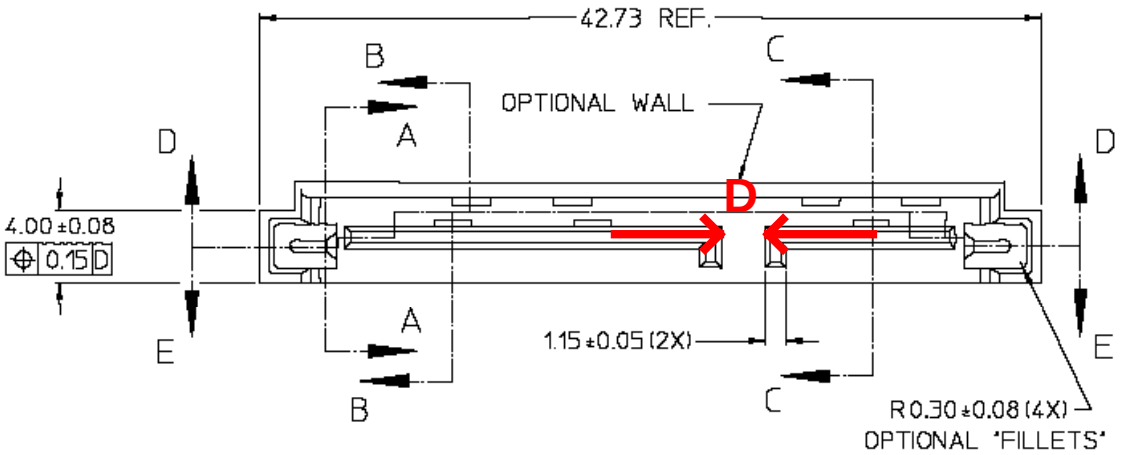

Figure 24

Observable Results:

- Verify that Measurement A = 1.23 +-0.05 mm.
- Verify that Measurement B = 1.58 +- 0.08 mm or 1.5 mm or more if the Optional Wall is not present.
- Verify that Measurement C = 33.39 +- 0.08 mm.
- Verify that Measurement D = 2.41 +- 0.05 mm.

Measurement Tolerance: +/- .01 mm

Possible Problems: None.

Test MDP-01 - Visual and Dimensional Inspections

Purpose: To verify that the device power plug is within the conformance limits.

References:

[1] Serial ATA Revision 2.5 specification section 6.1.10.2, Table 5
[2] Serial ATA Interoperability Program Unified Test Document, v1.0, Section 2.9.1

Resource Requirements:

Calipers with
- Inner and outer measurement jaws
  - Note: jaws should have narrow tips, to measure some of the smaller features of the connector.
- Resolution <= 0.01 mm
- Accuracy of +- 0.001" (+- 0.025 mm) or better
- Locking screw to hold the caliper jaws at a fixed location.

Example Calipers are:
- Mitutoyo model CD-6"CS, Code 500-196
- Mitutoyo model 573-221-10, narrow jaw caliper

Last Modification: February 27, 2006

Discussion: These tests verify that the device power plug is properly constructed and meets the dimensional specifications of Reference [1]. Reference [2] specifies which dimensions in reference [1] are to be measured.

Test Setup: See the Test Procedures below.

Test Procedure: Turn on the calipers, and verify the zero reading. Then perform the steps below to verify the following dimensions:

Measurement A: The thickness of the device plug tongue shall be 1.23 +-0.05 mm.

1. Using the outside measurement jaws of the calipers measure the thickness of the device plug tongue as shown in Figure 25. Perform a measurement sweep along the length of the connector, not just in one place. This will account for any variations in the connector. Record the worst-case measured value as *A*.

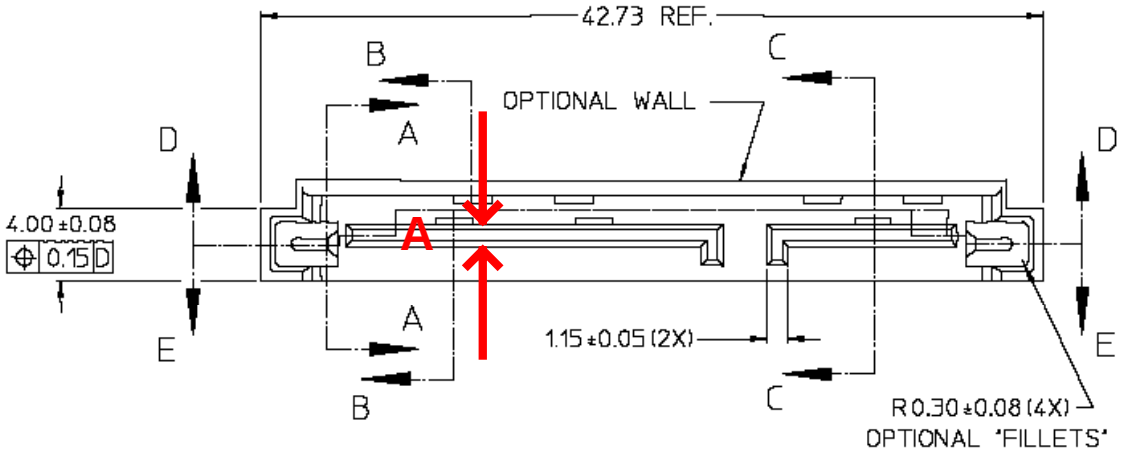

Figure 25

Measurement B: If the "Optional Wall" of Figure 28 from Reference [1] is present than the distance from the device plug tongue to the wall shall be 1.58 +- 0.08 mm. If the "Optional Wall" of Figure 28 from Reference [1] is not present than there shall be a minimum of a 1.5 mm keep out zone from Datum A of Figure 26 from Reference [1] to the nearest obstruction.

1. Using the inside measurement jaws of the calipers measure the distance between the device plug tongue and the Optional Wall or nearest obstruction, as indicated in Figure 26 below. Perform a measurement sweep along the length of the connector, not just in one place. This will account for any variations in the connector. Record the worst-case measured value as *B.*

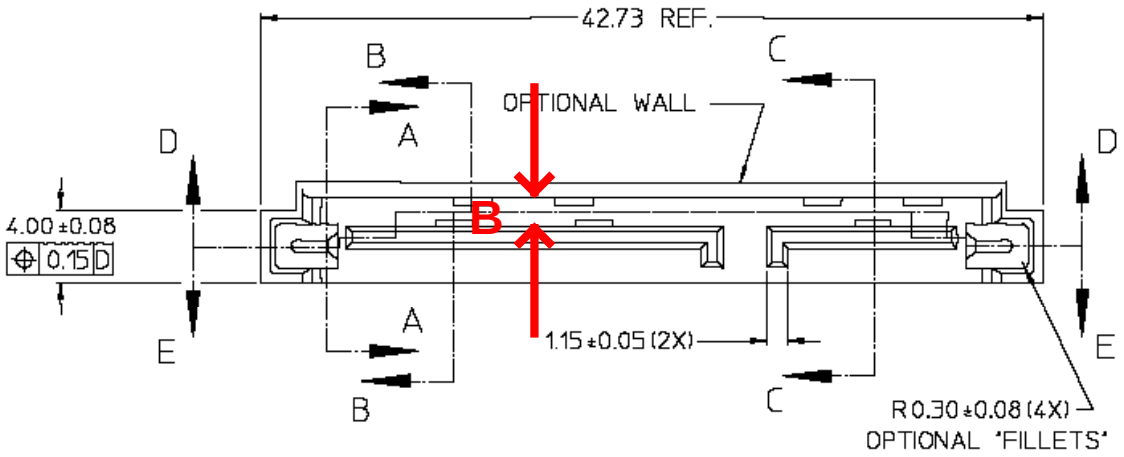

Figure 26

Observable Results:

- Verify that Measurement A = 1.23 +-0.05 mm.
- Verify that Measurement B = 1.58 +- 0.08 mm or 1.5 mm or more if the Optional Wall is not present.

Measurement Tolerance: +/- .01 mm

Possible Problems: None.