Serial ATA
International Organization

Revision 1.01
13 August 2007

Serial ATA Interoperability Program Revision 1.2
University of New Hampshire InterOperability Lab (UNH-IOL)
MOI for Device Mechanical Tests using Calipers (MDI, MDP)

TABLE OF CONTENTS

REVISION HISTORY

Revision	Date	Comments
0.7	04/03/07	First Version describing use of Calipers for SATA-IO Interoperability Program Revision 1.2 Device Mechanical tests MDI-01, MDI-02, MDP-01.
0.71	04/09/07	Updated MDI-01 to reflect changes from Unified Test Document to Measurement D for Slimline drives.
0.72	04/16/07	Updated MDI-01 measurement A1 for 3.5” HDD devices.
0.73	04/19/07	Updated MDI-01 measurement C for 3.5” and 2.5” HDD devices.
0.90	04/25/07	Added to Possible Problems of MDI-01 Measurement D
0.91	05/17/07	Updated MDI-01 Measurement C for Slimline drives.
1.0	7/12/07	Approved by Logo WG.
1.01	8/13/07	Corrected measurement C for 5.25” Optical and Non-optical devices and 2.5” and 3.5” HDD devices in test MDI-01. Corrected measurement for A1 for 2.5” and 3.5” HDD devices.

ACKNOWLEDGMENTS

The Serial ATA Logo Group would like to acknowledge the efforts of the following individuals in the development of this document:

David Woolf	University of New Hampshire InterOperability Lab (UNH-IOL)	djwoolf@iol.unh.edu

INTRODUCTION

This Method of Implementation document is intended to provide a description of the motivation, resources, procedures, and methodologies specific to each test taken from the SATA-IO Interoperability Program. The tests described in this document are the SATA-IO Device Mechanical tests. This document describes how to perform these tests using a caliper and flat measurement surface.

REFERENCES

The following documents are referenced in this text:

[1] Serial ATA Revision 2.5 specification
[2] Serial ATA II: Slimline Connector Specification Revision 1.0
[3] Serial ATA Interoperability Program Unified Test Document, v1.2

Test MDI-01 - Connector Location

Purpose: To verify that the location of the device plug connector relative to the device is within the conformance limits.

References:

[1] Serial ATA Revision 2.5 specification section 6.1
[2] Serial ATA II: Slimline Connector Specification Revision 1.0
[3] Serial ATA Interoperability Program Unified Test Document, v1.2, Section 2.8.1

Resource Requirements:

Calipers with:

Inner and outer measurement jaws

Note: jaws should have narrow tips, to measure some of the smaller features of the connector.

Depth measurement
Resolution <= 0.01 mm
Accuracy of +- 0.001” (+- 0.025 mm) or better
Locking screw to hold the caliper jaws at a fixed location.

Example Calipers are:

Mitutoyo model CD-6”CS, Code 500-196
Mitutoyo model 573-221-10, narrow jaw caliper

Flat Measurement Surface with holes.

Last Modification: May 17, 2007

Discussion: There are 6 device types covered by Reference [3], 12.7mm Slimline Devices, 9.5mm Slimline Devices, 5.25” optical devices, 5.25” non optical devices, 3.5” side and bottom mounted devices, 2.5” side and bottom mounted devices. For each device type there are 4 measurements to be taken to verify that the connector is properly located on the device. Reference [3] specifies which dimensions in references [1] and [2] are to be measured.

Test Setup: See the Test Procedures below for each device type.

Test Procedure: Turn on the calipers, and verify the zero reading. Then perform the steps below to verify the following dimensions:

<u>For a 12.7mm Slimline Device:</u>

Measurement A: From the bottom surface of the drive to the top of the tongue of the SATA plug shall be 6.20 +- 0.38 mm (Figure 3 of [2]).

- Place the flat surface against the device as shown below. Perform the measurement indicated below using the outside measurement jaws of the caliper. Perform a measurement sweep along the length of the connector, not just in one place. This will account for any variations in the connector. Record the worst-case measured value as *A*+*F*.
- Measure the thickness of the flat surface, record this as *F*.
- Subtract *F* from (*A*+*F*), record the value as *A*.

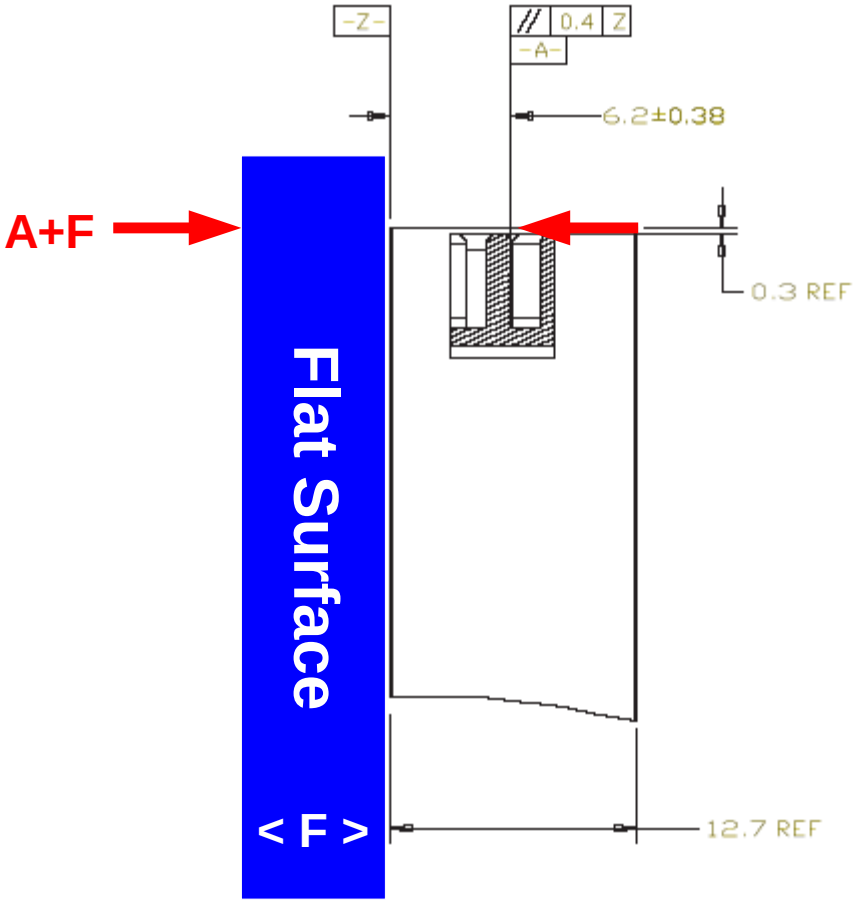

Measurement B: Parallelism of the top of the tongue of the SATA plug vs. the bottom surface of the drive shall be 0.40 mm (Figure 1 of [2]).

- Place the flat surface against the device as shown below. Perform the measurement indicated below using the outside measurement jaws of the caliper. Perform a measurement sweep along the length of the connector, not just in one place. This will account for any variations in the connector. Record the largest and smallest observed values as *B1* and *B2*.
- Determine the absolute value of the difference of *B1* and *B2*. Record the value as *B*.

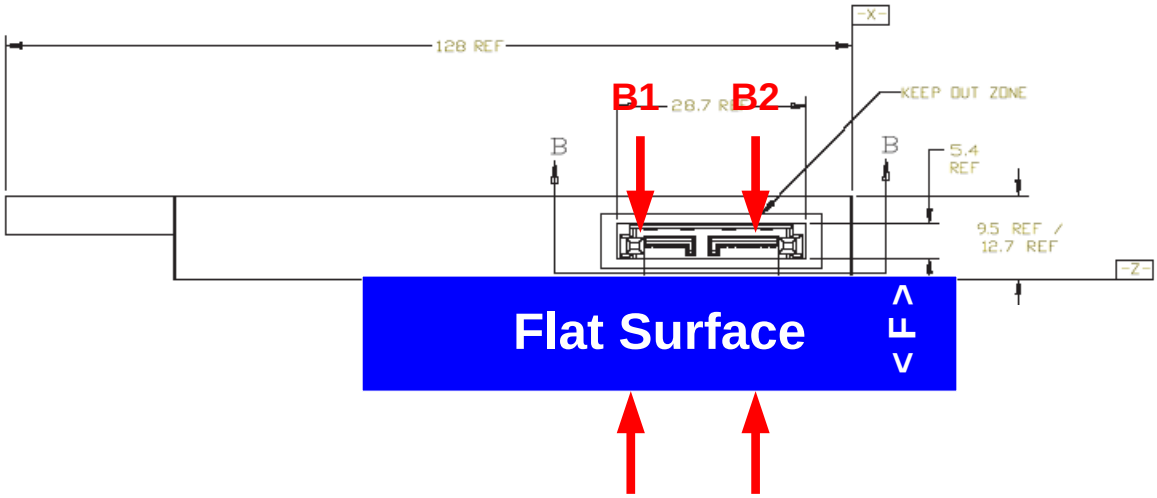

Measurement C: From the edge of the drive to the centerline of the SATA plug shall be 21.25 +- 0.38 mm (Figure 1 of [2]).

- Perform the measurements indicated below using the outside measurement jaws of the caliper. Record the observed values as *C1* and *C2*.
- Determine the value of *C* using the formula $C = C1 - (C2/2)$.

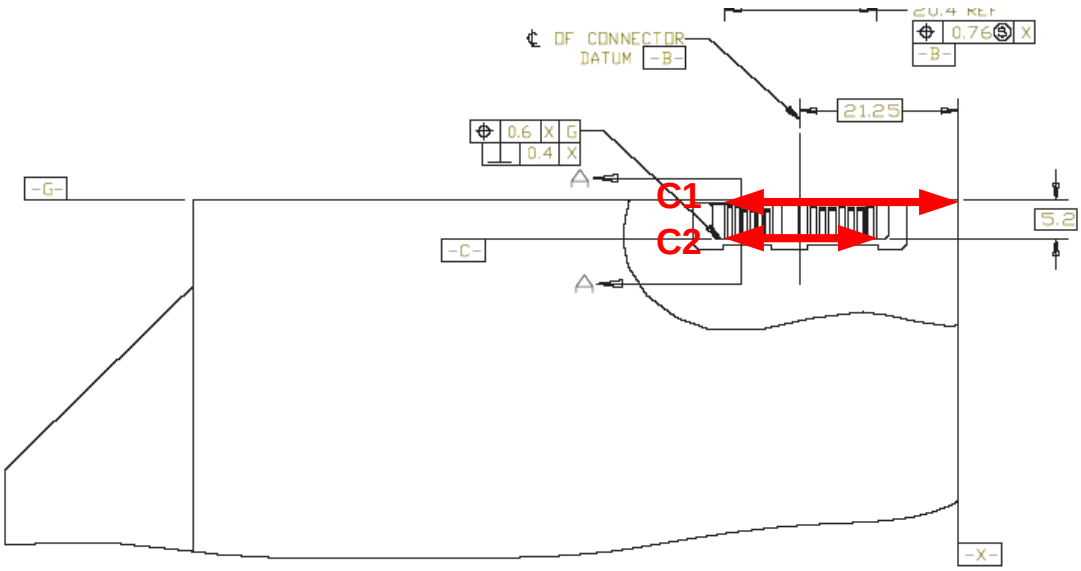

Measurement D: From the back surface of the drive (i.e. the "end of the device factor") to the base of the tongue of the SATA plug shall be 5.20 +- 0.3 mm (Figure 1 of [2]).

- Place the flat surface against the device as shown below. Perform the measurement indicated below using the depth measurement device of the caliper. Record the observed value as *D+F*.
- Measure the thickness of the flat surface, record this as *F*.
- Subtract F from (*D+F*), record the value as *D*.

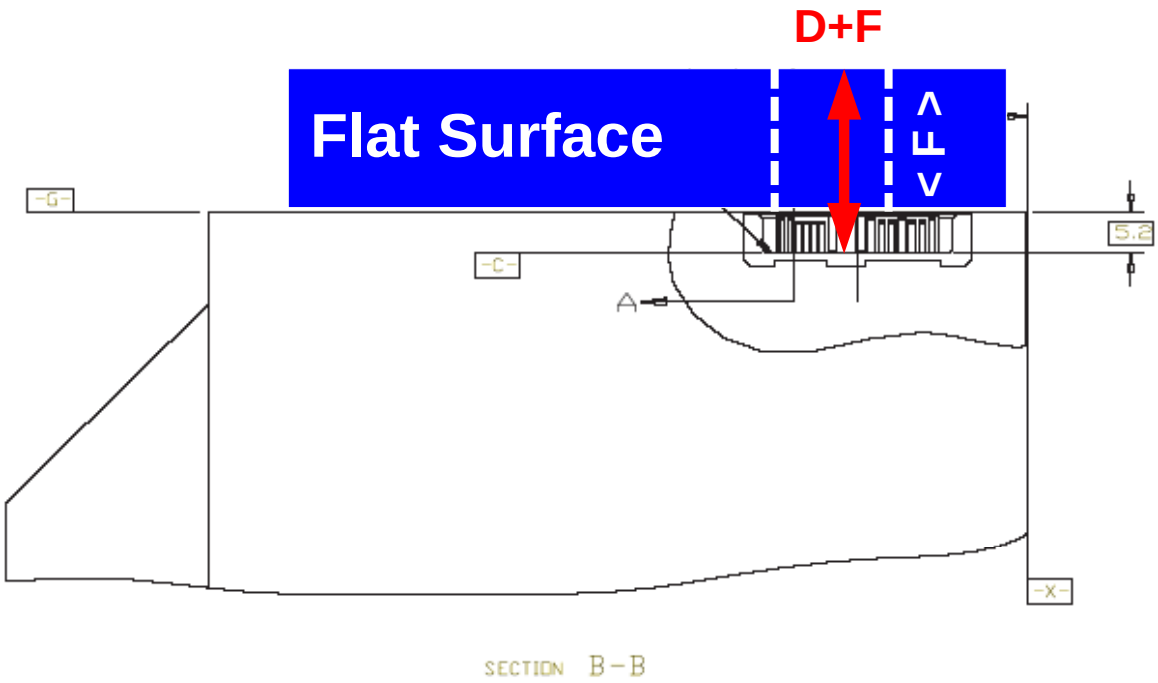

<u>For a 9.5mm Slimline Device:</u>

Measurement A: From the bottom surface of the drive to the top of the tongue of the SATA plug shall be 6.00 +- 0.38 mm (Figure 3 of [2]).

- Place the flat surface against the device as shown below. Perform the measurement indicated below using the outside measurement jaws of the caliper. Perform a measurement sweep along the length of the connector, not just in one place. This will account for any variations in the connector. Record the worst-case measured value as *A*+*F*.
- Measure the thickness of the flat surface, record this as *F*.
- Subtract *F* from (*A*+*F*), record the value as *A*.

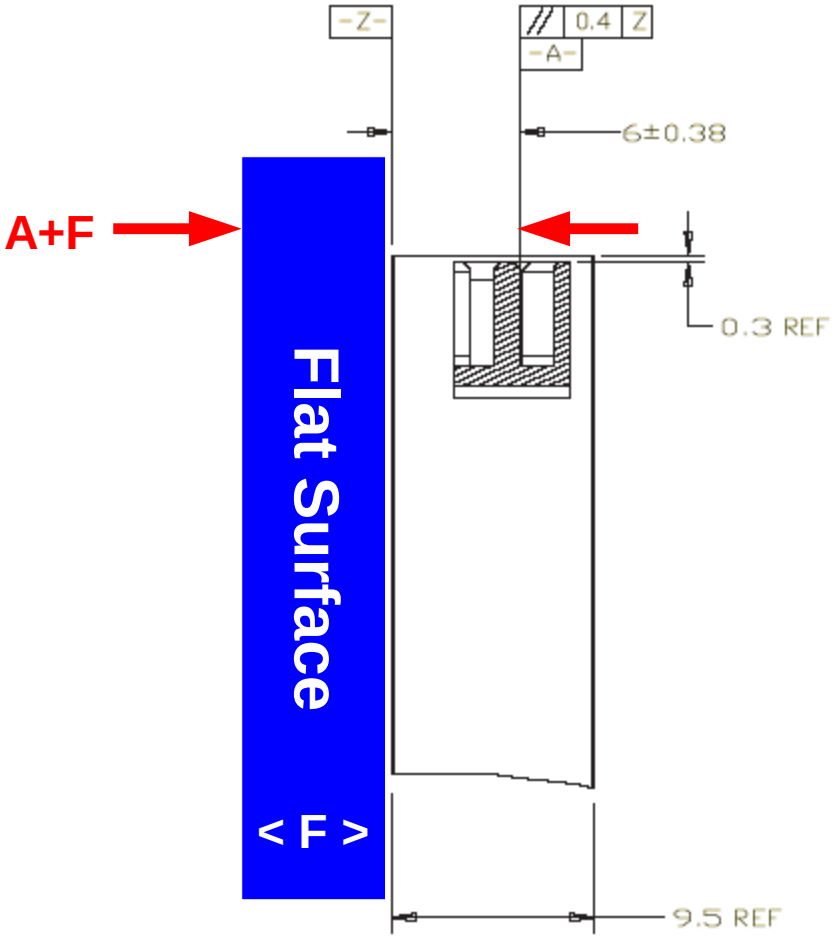

Measurement B: Parallelism of the top of the tongue of the SATA plug vs. the bottom surface of the drive shall be 0.40 mm (Figure 1 of [2]).

- Place the flat surface against the device as shown below. Perform the measurement indicated below using the outside measurement jaws of the caliper. Perform a measurement sweep along the length of the connector, not just in one place. This will account for any variations in the connector. Record the largest and smallest observed values as *B1* and *B2*.
- Determine the absolute value of the difference of *B1* and *B2*. Record the value as *B*.

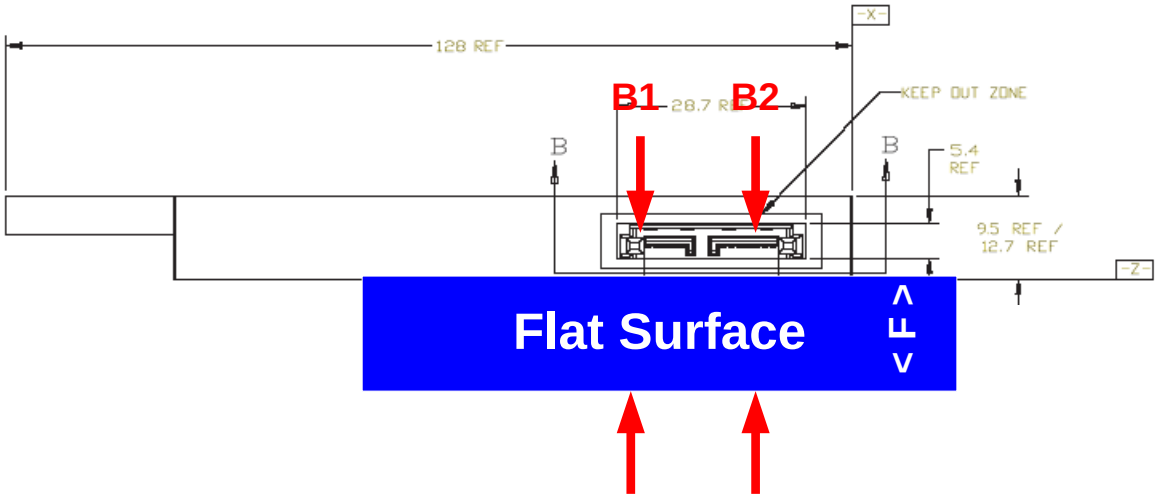

Measurement C: From the edge of the drive to the centerline of the SATA plug shall be 21.25 +- 0.38 mm (Figure 1 of [2]).

- Perform the measurements indicated below using the outside measurement jaws of the caliper. Record the observed values as *C1 and C2*.
- Determine the value of *C* using the formula *C = C1 – (C2/2).*

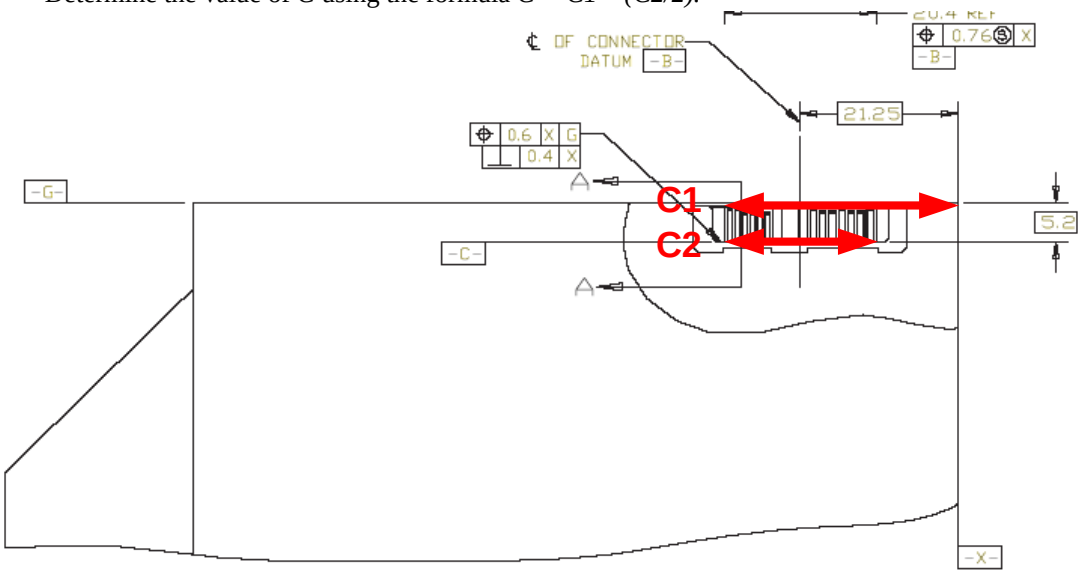

Measurement D: From the back surface of the drive (i.e. the "end of the device factor") to the base of the tongue of the SATA plug shall be 5.3 +- 0.3 mm (Figure 1 of [2]).

- Place the flat surface against the device as shown below. Perform the measurement indicated below using the depth measurement device of the caliper. Record the observed value as *D+F*.
- Measure the thickness of the flat surface, record this as *F*.
- Subtract F from (*D+F*), record the value as *D*.

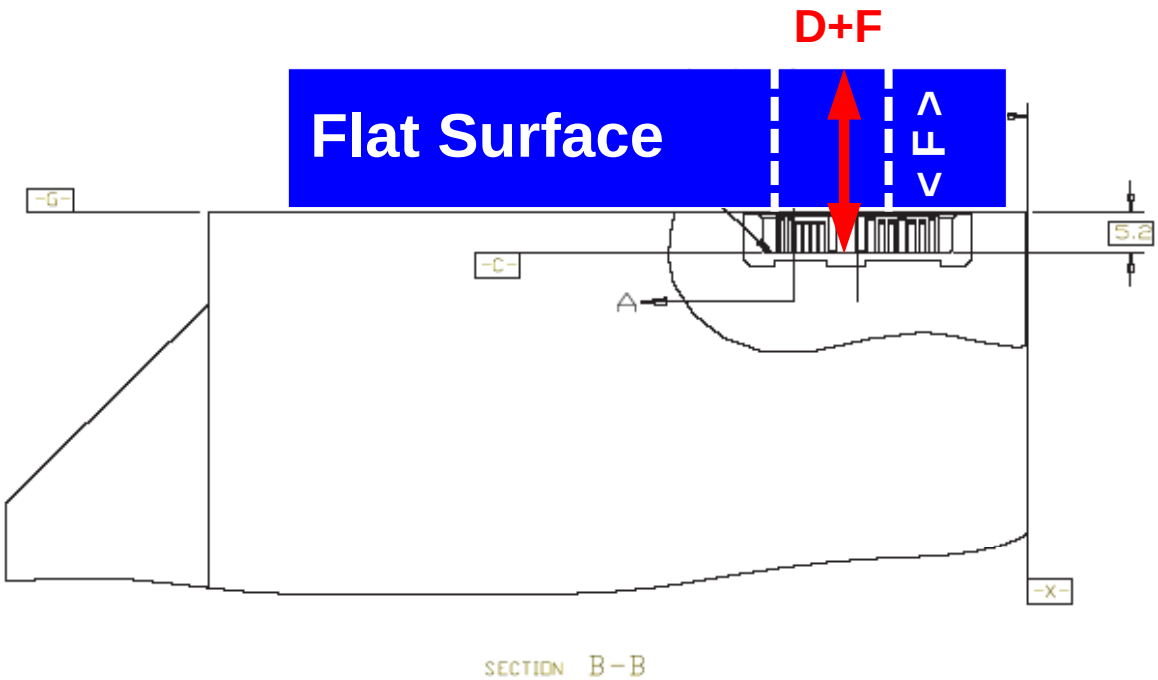

<u>For a 5.25” Optical Device:</u>

Measurement A: From the bottom surface of the drive to the top of the tongue of the SATA plug shall be 10.00 +- 0.38 mm (Figure 18 of [1]).

- Place the flat surface against the device as shown below. Perform the measurement indicated below using the outside measurement jaws of the caliper. Perform a measurement sweep along the length of the connector, not just in one place. This will account for any variations in the connector. Record the worst-case measured value as *A+F*.
- Measure the thickness of the flat surface, record this as *F*.
- Subtract F from (*A+F*), record the value as *A*.

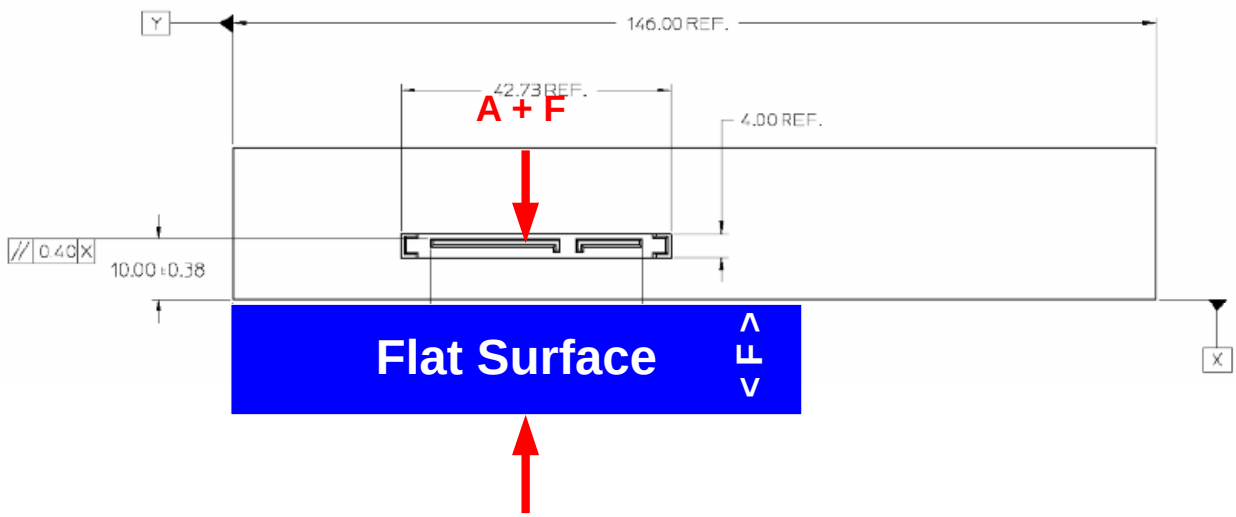

Measurement B: Parallelism of the top of the tongue of the SATA plug vs. the bottom surface of the drive shall be 0.40 mm (Figure 18 of [1]).

- Place the flat surface against the device as shown below. Perform the measurement indicated below using the outside measurement jaws of the caliper. Perform a measurement sweep along the length of the connector, not just in one place. This will account for any variations in the connector. Record the largest and smallest observed values as *B1* and *B2*.
- Determine the absolute value of the difference of *B1* and *B2*. Record the value as *B*.

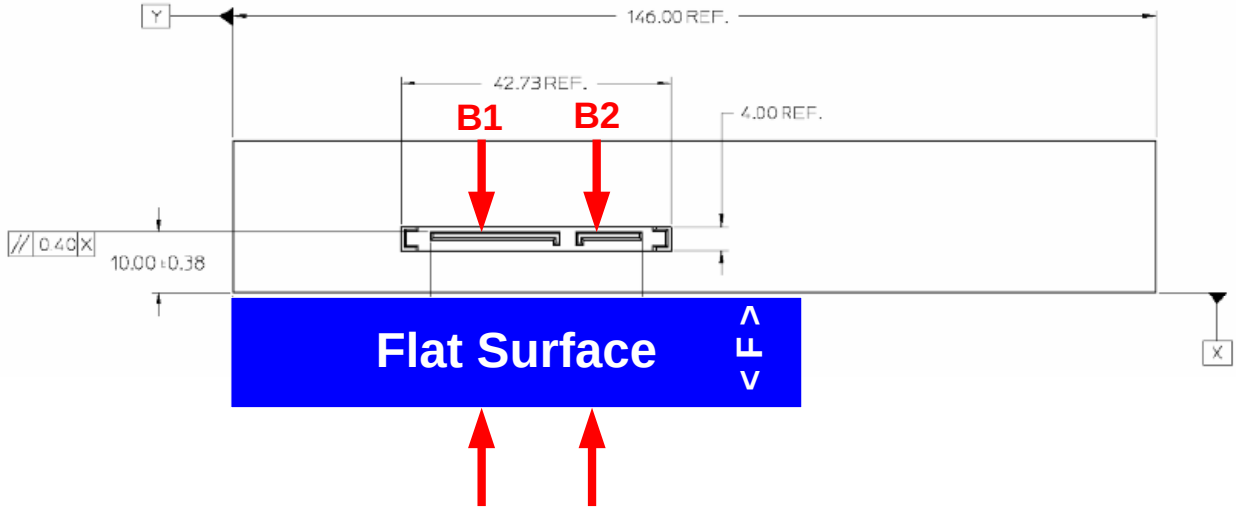

Measurement C: From the centerline of the drive to the centerline of the SATA plug shall be 25.00 +- 0.38 mm (Figure 18 of [1]).

- Perform the measurements indicated below using the outside measurement jaws of the caliper. Record the observed values as *C1*, *C2* and *C3*.
- Determine the value of *C* using the formula $C = (C1/2) - (C3 - (C2/2))$

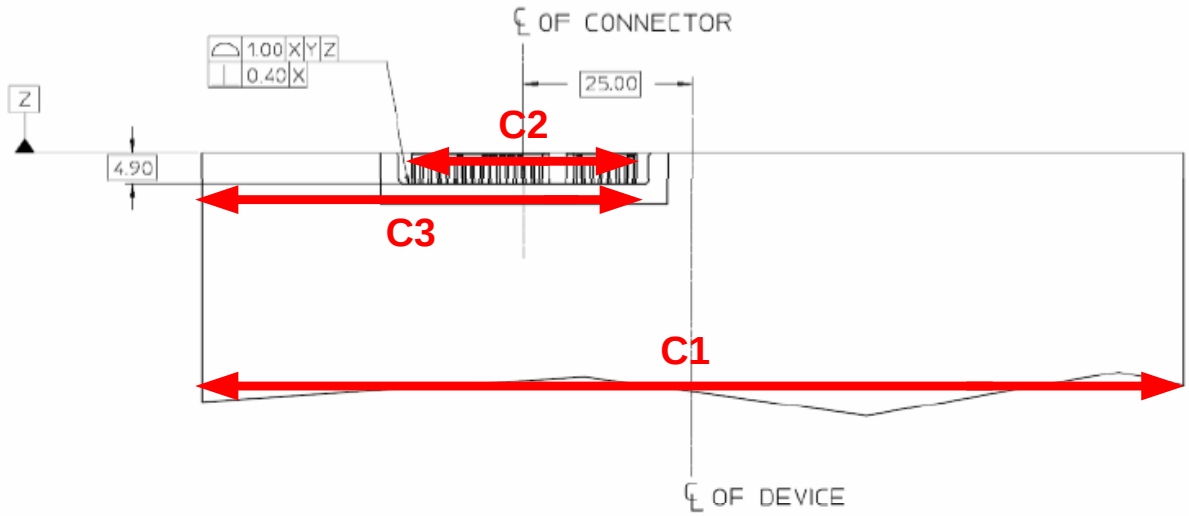

Measurement D: From the back surface of the drive (i.e. the "end of the device factor") to the base of the tongue of the SATA plug shall be 4.90 +- 0.50 mm (Figure 18 of [1]).

- Place the flat surface against the device as shown below. Perform the measurement indicated below using the depth measurement device of the caliper. Record the observed value as *D+F*.
- Measure the thickness of the flat surface, record this as *F*.
- Subtract F from (*D+F*), record the value as *D*.

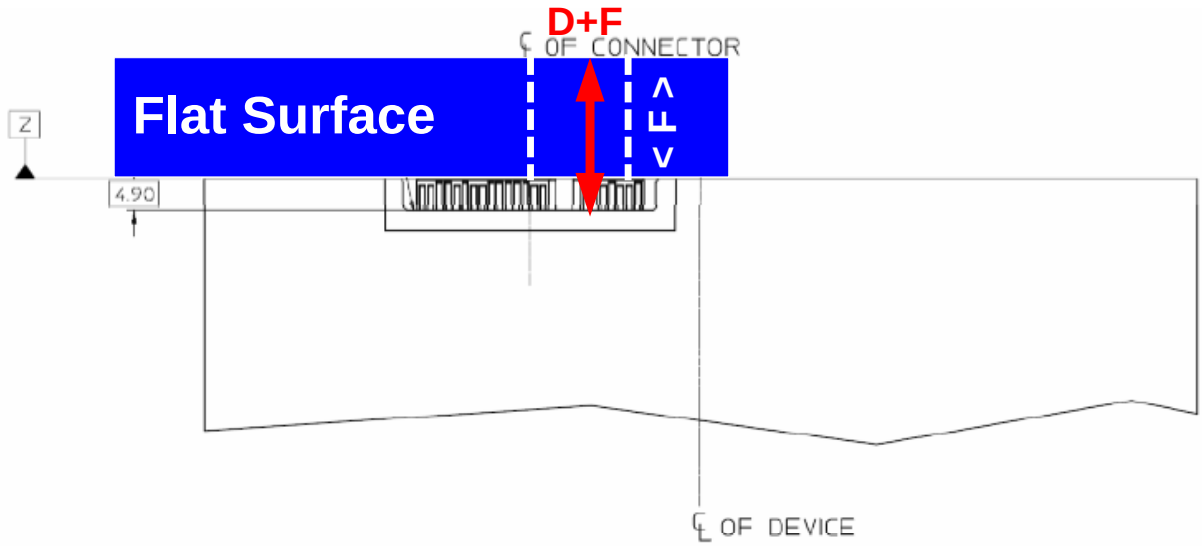

<u>For a 5.25" Non-optical Device:</u> If the device follows section 6.1.2, Figure 18 of [1] then use the Pass/Fail criteria for a 5.25" optical device above. If the device does not follow section 6.1.2, Figure 18 then perform the following measurements:

Measurement A: From the bottom surface of the drive to the top of the tongue of the SATA plug shall be 3.5 +- 0.38 mm (Figure 19 of [1]).

- Place the flat surface against the device as shown below. Perform the measurement indicated below using the outside measurement jaws of the caliper. Perform a measurement sweep along the length of the connector, not just in one place. This will account for any variations in the connector. Record the worst-case measured value as *A+F*.
- Measure the thickness of the flat surface, record this as *F*.
- Subtract F from (*A+F)*, record the value as *A*.

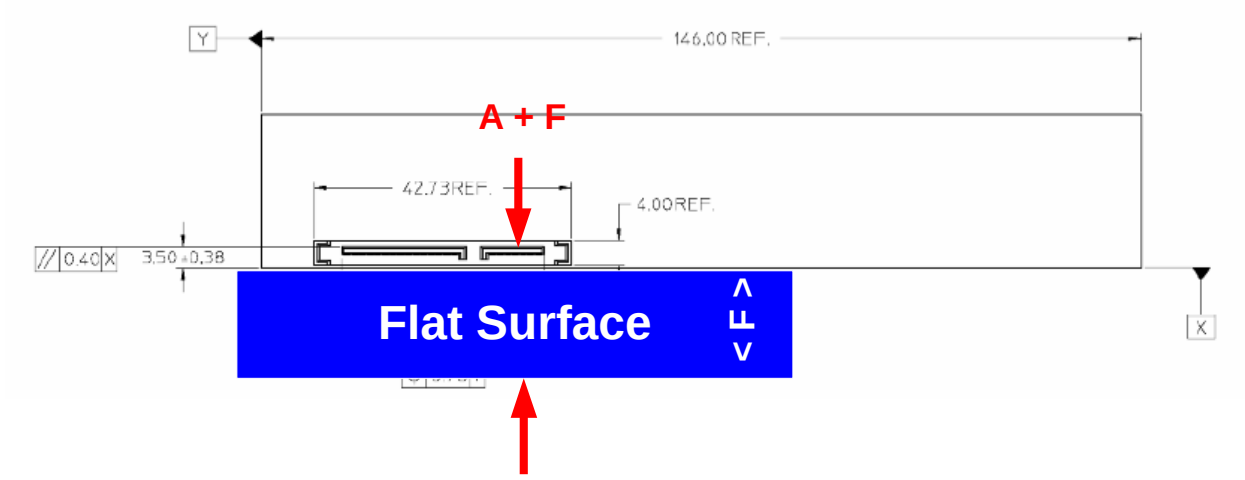

Measurement B: Parallelism of the top of the tongue of the SATA plug vs. the bottom surface of the drive shall be 0.40 mm (Figure 19 of [1]).

- Place the flat surface against the device as shown below. Perform the measurement indicated below using the outside measurement jaws of the caliper. Perform a measurement sweep along the length of the connector, not just in one place. This will account for any variations in the connector. Record the largest and smallest observed values as *B1* and *B2*.
- Determine the absolute value of the difference of *B1* and *B2*. Record the value as *B*.

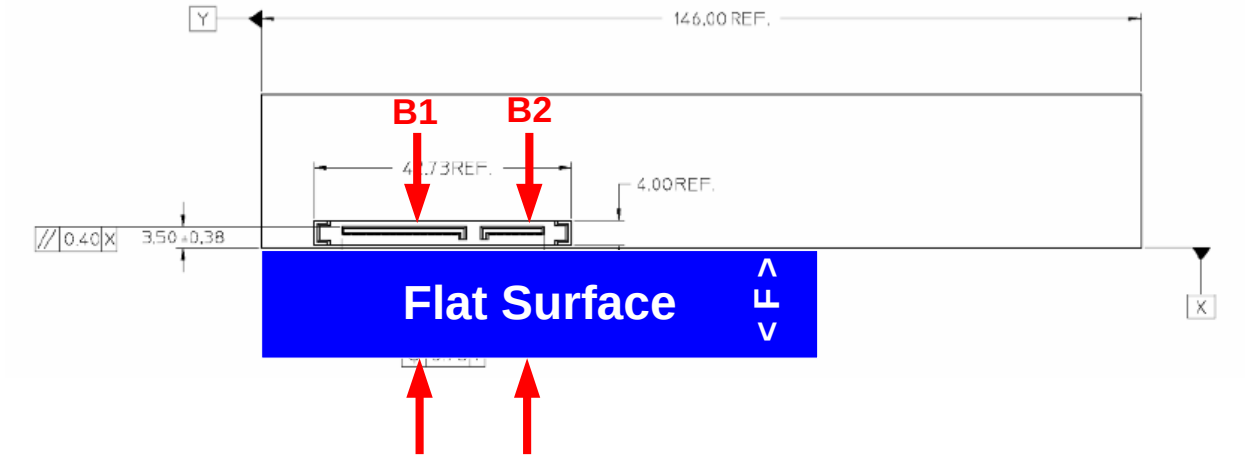

Measurement C: From the centerline of the drive to the centerline of the SATA plug shall be 42.90 +- 0.38 mm (Figure 19 of [1]).

- Perform the measurements indicated below using the outside measurement jaws of the caliper. Record the observed values as *C1*, *C2* and *C3*.
- Determine the value of *C* using the formula $C = (C1/2) – (C3 – (C2/2))$

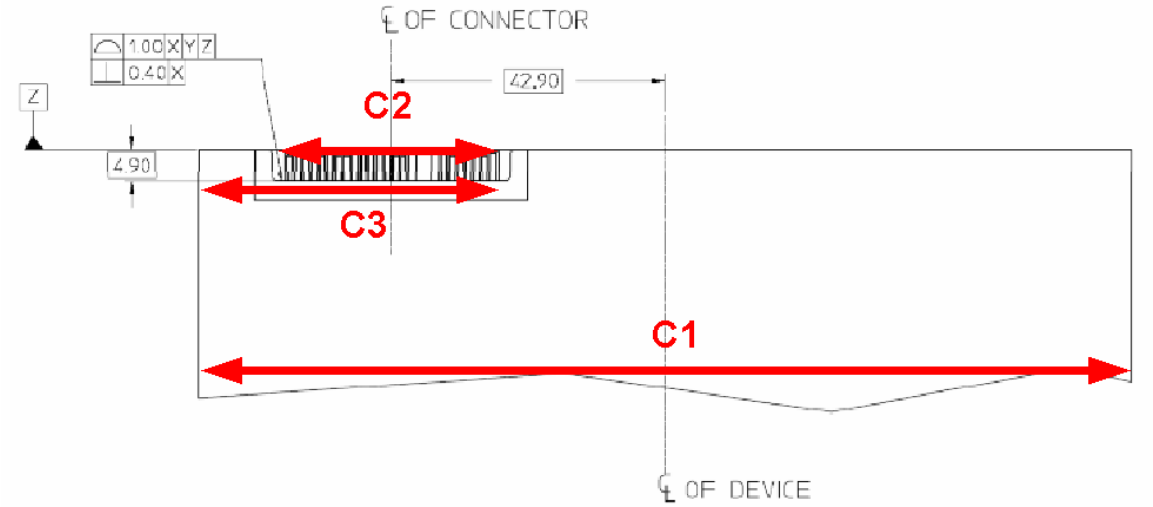

Measurement D: From the back surface of the drive (i.e. the "end of the device factor") to the base of the tongue of the SATA plug shall be 4.90 +- 0.50 mm (Figure 19 of [1]).

- Place the flat surface against the device as shown below. Perform the measurement indicated below using the depth measurement device of the caliper. Record the observed value as *D+F*.
- Measure the thickness of the flat surface, record this as *F*.
- Subtract F from (*D+F*), record the value as *D*.

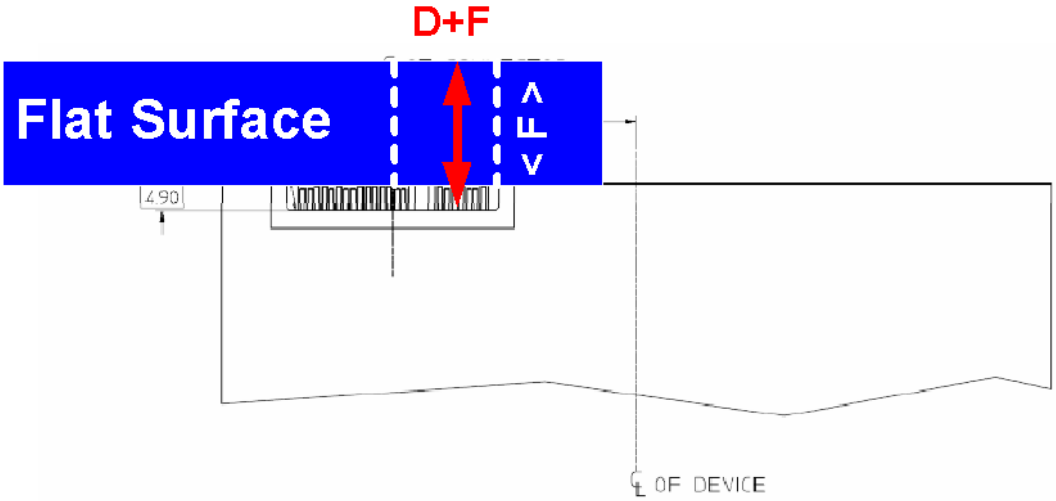

<u>For a 3.5” Side and Bottom Mounted Device</u>

Measurement A1: From the centerline of the side mounting holes to the top of the tongue of the SATA plug shall be 2.85 +- 0.38 mm (Figure 20 of [1]).

- Place the flat surface against the device as shown below. Perform the *AA* measurement indicated below using the inside measurement jaws of the caliper.
- Perform the *AB* measurement from the side of the mounting hole closest to the bottom of the drive using the outside measurement jaws of the caliper.
- Perform the *AC* measurement using the outside measurement jaws of the caliper.
- Determine *A1* using the formula *A1 = AC - (AB + (AA/2)).*

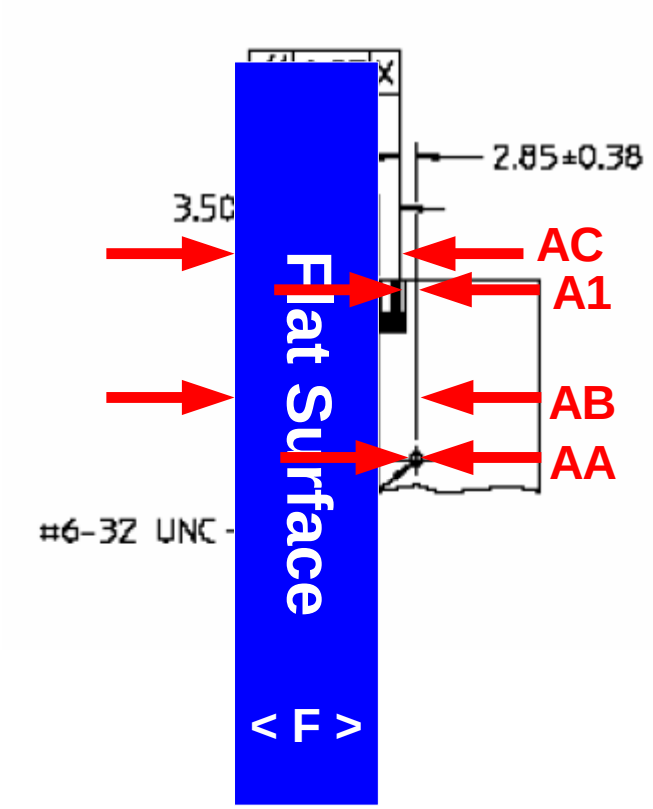

Measurement A2: From the bottom surface of the drive to the top of the tongue of the SATA plug shall be 3.50 +- 0.38 mm (Figure 20 of [1]).

- Place the flat surface against the device as shown below. Perform the measurement indicated below using the outside measurement jaws of the caliper. Record the observed value as *A2+F*.
- Measure the thickness of the flat measurement surface. Record the value as *F*.
- Determine *A2* using the formula *A2 = A2+F - F*.

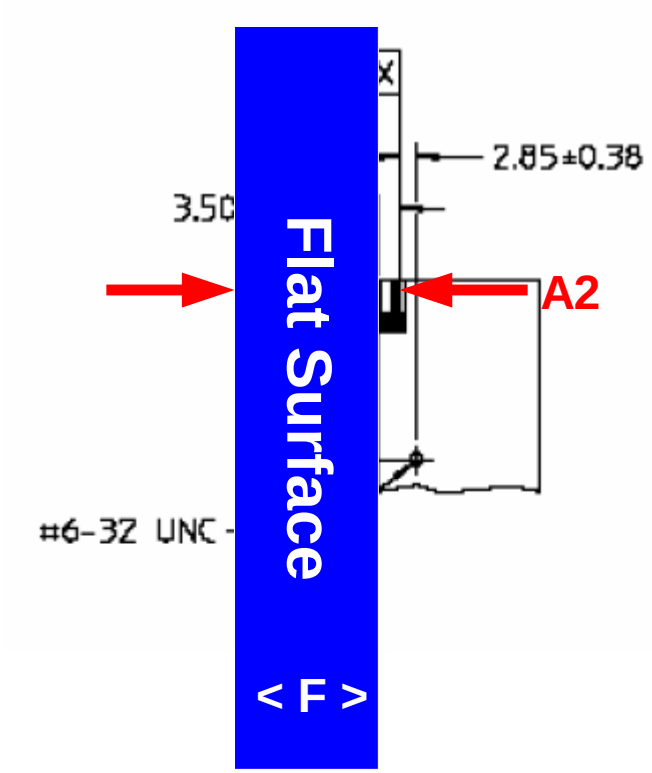

Measurement B: Parallelism of the top of the tongue of the SATA plug vs. the bottom surface of the drive shall be 0.25 mm (Figure 20 of [1]).

- Place the flat surface against the device as shown below. Perform the measurement indicated below using the outside measurement jaws of the caliper. Perform a measurement sweep along the length of the connector, not just in one place. This will account for any variations in the connector. Record the largest and smallest observed values as *B1* and *B2*.
- Determine the absolute value of the difference of *B1* and *B2*. Record the value as *B*.

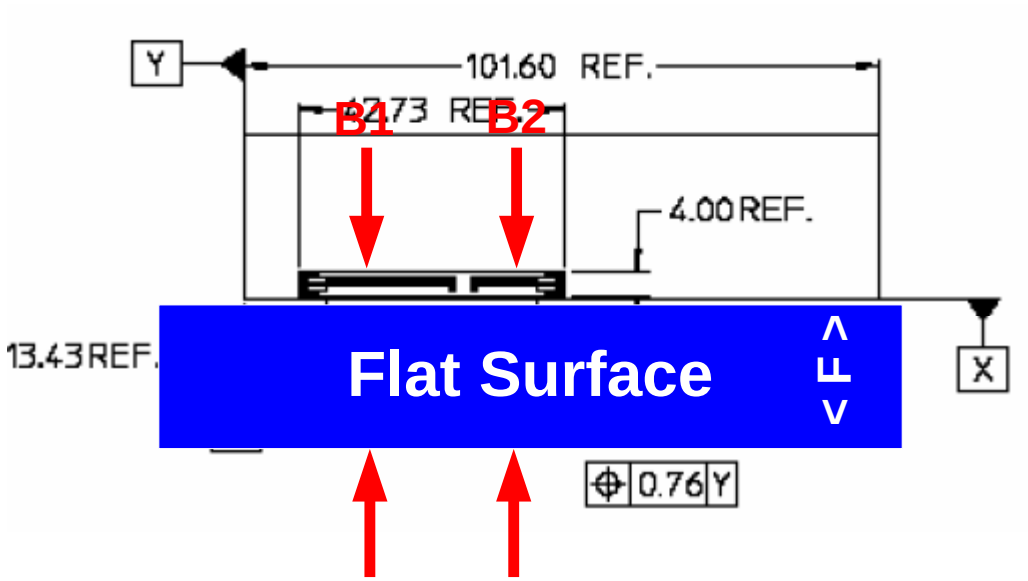

Measurement C: From the centerline of the drive to the centerline of the SATA plug shall be 20.68 +- 0.38 mm (Figure 20 of [1]).

- Perform the measurements indicated below using the outside measurement jaws of the caliper. Record the observed values as *C1*, *C2*, *C3* and *F*.
- Determine the value of *C* using the formula $C = (C1/2) - ((C3-F) - (C2/2))$

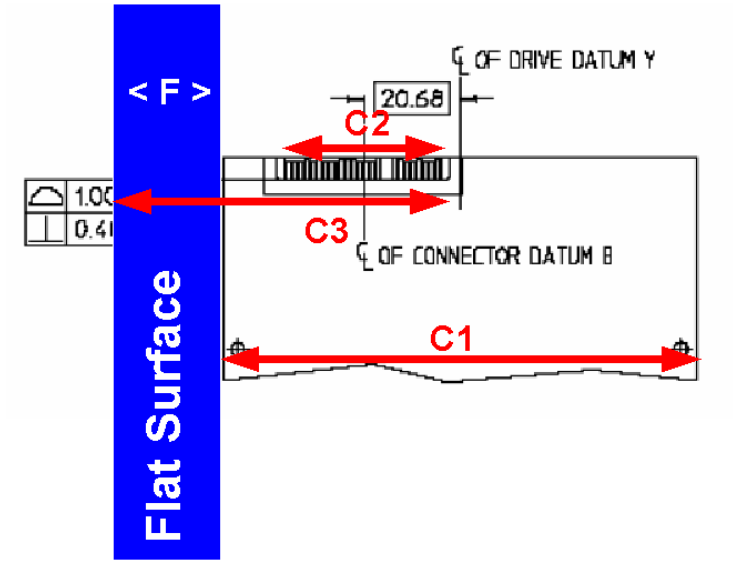

Measurement D1: From the centerline of the side mounting holes to the base of the tongue of the SATA plug shall be 23.60 +- 0.50 mm (Figure 20 of [1]).

- Place the flat surface against the device as shown below. Perform the *DA* measurement indicated below using the inside measurement jaws of the caliper.
- Perform the *DB* measurement from the side of the mounting hole closest to the back surface of the drive using the outside measurement jaws of the caliper.
- Perform the *DC* measurement using the calipers depth measurement device.
- Determine *D1* using the formula *D1 = DB – DC + DA/2.*

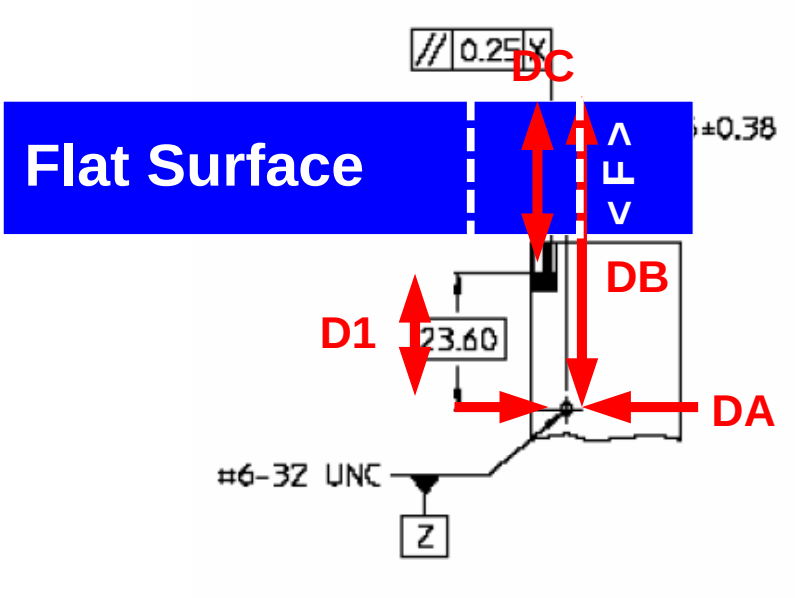

Measurement D2: From the centerline of the bottom mounting holes to the base of the tongue of the SATA plug 36.38 +- 0.50 mm (Figure 21 of [1]).

- Place the flat surface against the device as shown below. Perform the *DA* measurement indicated below using the inside measurement jaws of the caliper.
- Perform the *DB* measurement from the side of the mounting hole closest to the back surface of the drive using the outside measurement jaws of the caliper.
- Perform the *DC* measurement using the calipers depth measurement device.
- Determine *D2* using the formula *D2 = DB – DC + DA/2.*

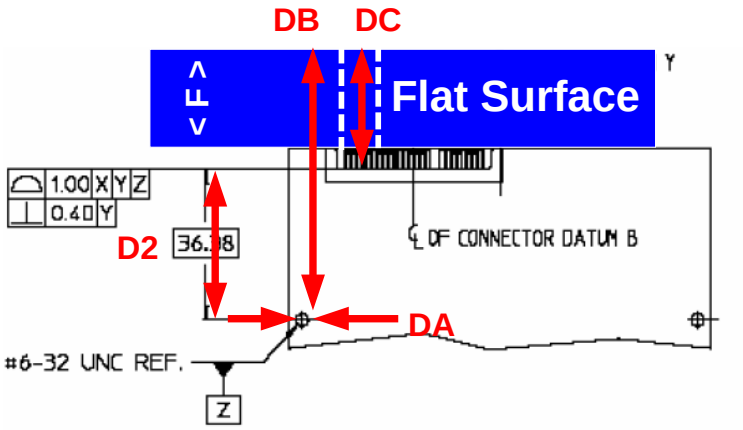

<u>For a 2.5” Side and Bottom Mounted Device</u>

Measurement A1: From the centerline of the side mounting holes to the top of the tongue of the SATA plug shall be 0.50 +- 0.38 mm (Figure 22 of [1]).

- Place the flat surface against the device as shown below. Perform the *A1* measurement indicated below using the inside measurement jaws of the caliper.
- Perform the *AB* measurement from the side of the mounting hole closest to the bottom of the drive using the outside measurement jaws of the caliper.
- Perform the *AC* measurement using the outside measurement jaws of the caliper.
- Determine *A1* using the formula $A = AC - (AB + (AA/2))$.

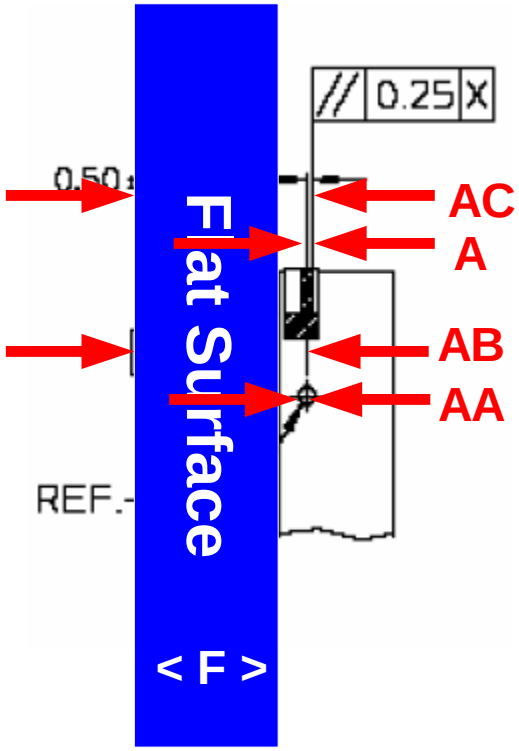

Measurement A2: From the bottom surface of the drive to the top of the tongue of the SATA plug shall be 3.50 +- 0.38 mm (Figure 22 of [1]).

- Place the flat surface against the device as shown below. Perform the measurement indicated below using the outside measurement jaws of the caliper. Record the observed value as *A2+F*.
- Measure the thickness of the flat measurement surface. Record the value as *F*.
- Determine *A2* using the formula *A2 = A2+F - F*.

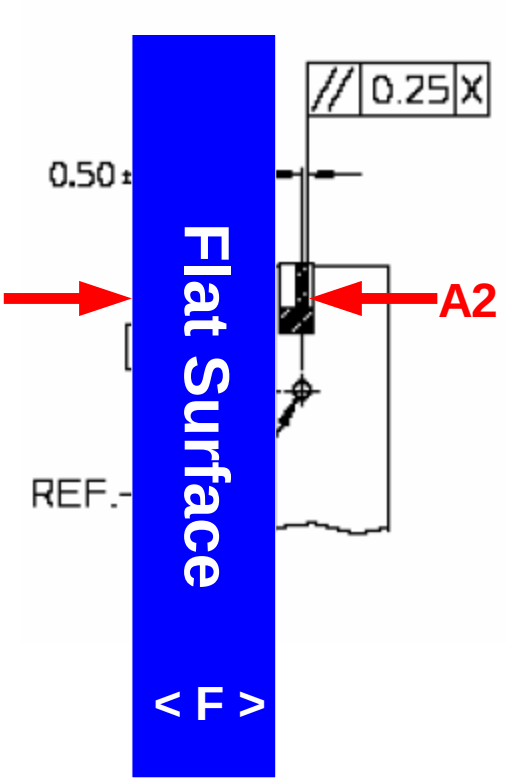

Measurement B: Parallelism of the top of the tongue of the SATA plug vs. the bottom surface of the drive shall be 0.25 mm (Figure 22 of [1]).

- Place the flat surface against the device as shown below. Perform the measurement indicated below using the outside measurement jaws of the caliper. Perform a measurement sweep along the length of the connector, not just in one place. This will account for any variations in the connector. Record the largest and smallest observed values as *B1* and *B2*.
- Determine the absolute value of the difference of *B1* and *B2*. Record the value as *B*.

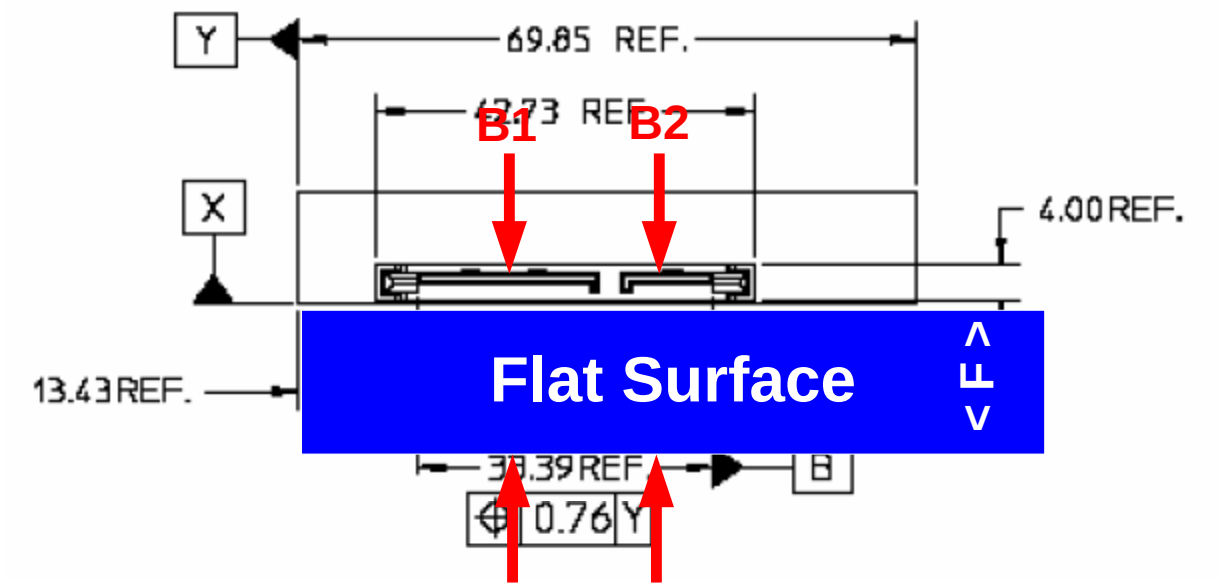

Measurement C: From the centerline of the drive to the centerline of the SATA plug shall be 4.80 +- 0.38 mm (Figure 22 of [1]).

- Perform the measurements indicated below using the outside measurement jaws of the caliper. Record the observed values as *C1*, *C2*, *C3* and *F*.
- Determine the value of *C* using the formula $C = (C1/2) – ((C3-F) – (C2/2))$

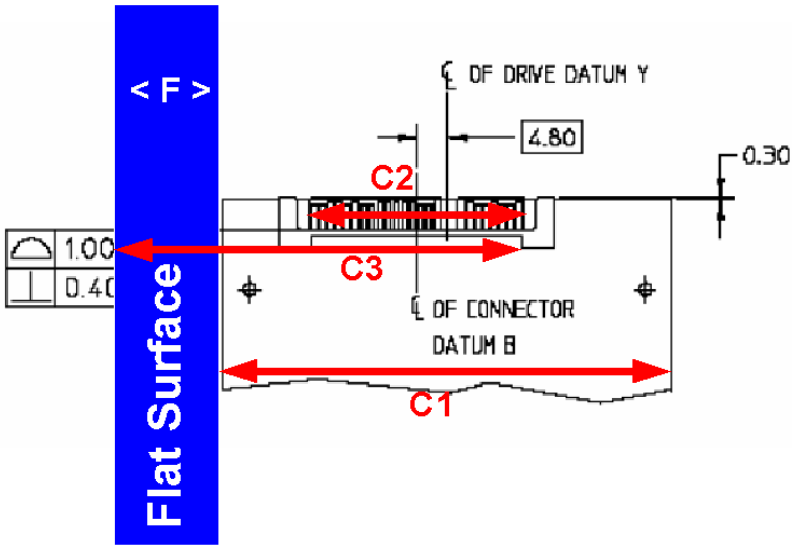

Measurement D1: From the centerline of the side mounting holes to the base of the tongue of the SATA plug shall be 9.40 +- 0.50 mm (Figure 22, 23 of [1]).

- Place the flat surface against the device as shown below. Perform the *DA* measurement indicated below using the inside measurement jaws of the caliper.
- Perform the *DB* measurement from the side of the mounting hole closest to the back surface of the drive using the outside measurement jaws of the caliper.
- Perform the *DC* measurement using the calipers depth measurement device.
- Determine *D1* using the formula *D1 = DB – DC + DA/2.*

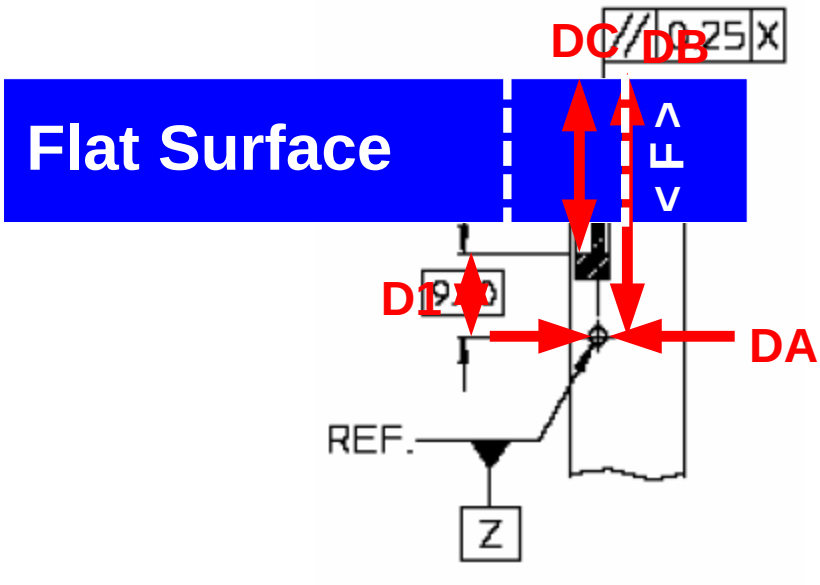

Measurement D2: From the centerline of the bottom mounting holes to the base of the tongue of the SATA plug shall be 9.40 +- 0.50 mm (Figure 22, 23 of [1]).

- Place the flat surface against the device as shown below. Perform the *DA* measurement indicated below using the inside measurement jaws of the caliper.
- Perform the *DB* measurement from the side of the mounting hole closest to the back surface of the drive using the outside measurement jaws of the caliper.
- Perform the *DC* measurement using the calipers depth measurement device.
- Determine *D2* using the formula *D2 = DB – DC + DA/2.*

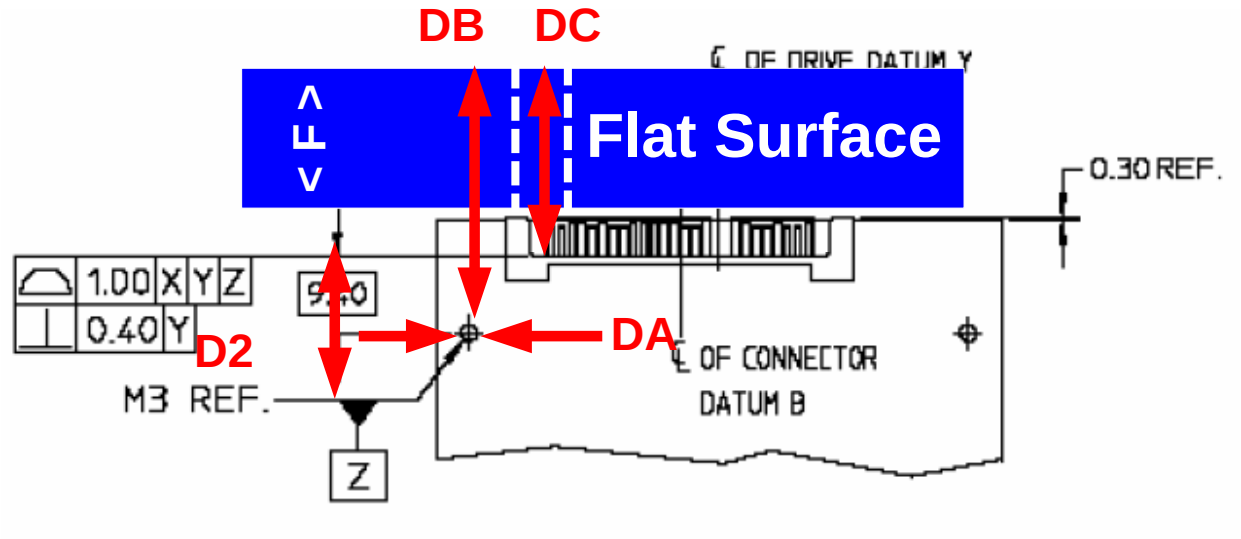

Observable Results:

For 12.7mm Slimline Devices:

a) Verify that measurement A = 6.20 +- 0.38 mm
b) Verify that measurement B <= 0.40 mm
c) Verify that measurement C = 21.25 +- 0.38 mm
d) Verify that measurement D = 5.20 +- 0.3 mm

For 9.5mm Slimline Devices:

a) Verify that measurement A =6.00 +- 0.38 mm
b) Verify that measurement B <= 0.40 mm
c) Verify that measurement C = 21.25 +- 0.38 mm
d) Verify that measurement D = 5.20 +- 0.3 mm

For 5.25" Non-optical Devices:

a) Verify that measurement A = 3.50 +- 0.38 mm
b) Verify that measurement B <= 0.40 mm
c) Verify that measurement C = 42.90 +- 0.38 mm
d) Verify that measurement D = 4.90 +- 0.50 mm

For 5.25" Optical Devices:

a) Verify that measurement A = 10.00 +- 0.38 mm
b) Verify that measurement B <= 0.40 mm
c) Verify that measurement C = 25.00 +- 0.38 mm
d) Verify that measurement D = 4.90 +- 0.50 mm

For 3.5" Side and Bottom mounted Devices:

a1) Verify that Measurement A1 = 2.85 +- 0.38 mm
a2) Verify that Measurement A2 = 3.50 +- 0.38 mm
b) Verify that measurement B <= 0.25 mm
c) Verify that Measurement C =20.68 +- 0.38 mm
d1) Verify that Measurement D1 =23.60 +- 0.50 mm
d2) Verify that Measurement D2 = 36.38 +- 0.50 mm

For 2.5" Side and Bottom mounted Devices:

a1) Verify that Measurement A1 = 0.50 +- 0.38 mm
a2) Verify that Measurement A2 =3.50 +- 0.38 mm
b) Verify that measurement B <= 0.25 mm
c) Verify that Measurement C = 4.80 +- 0.38 mm
d1) Verify that Measurement D1 =9.40 +- 0.50 mm
d2) Verify that Measurement D2 =9.40 +- 0.50 mm

Measurement Tolerance: +/- .01 mm

Possible Problems: For measurements D, D1, and D2 on all device types, if the connector protrudes beyond the back of the drive it may be difficult to use a flat surface in performing the measurement. The flat surface may be modified with a recess to allow for the protruding connector.

Test MDI-02 - Visual and Dimensional Inspections

Purpose: To verify that the device connector plug is within the conformance limits.

References:

[1] Serial ATA Revision 2.5 specification section 6.1
[2] Serial ATA II: Slimline Connector Specification Revision 1.0
[3] Serial ATA Interoperability Program Unified Test Document, v1.2, Section 2.8.2

Resource Requirements:

Calipers with
- Inner and outer measurement jaws
  - Note: jaws should have narrow tips, to measure some of the smaller features of the connector.
- Resolution <= 0.01 mm
- Accuracy of +- 0.001" (+- 0.025 mm) or better
- Locking screw to hold the caliper jaws at a fixed location.

Example Calipers are:
- Mitutoyo model CD-6"CS, Code 500-196
- Mitutoyo model 573-221-10, narrow jaw caliper

Last Modification: April 2, 2007

Discussion: These tests verify that the device connector plug is properly constructed and meets the dimensional specifications of References [1] and [2]. Reference [3] specifies which dimensions in references [1] and [2] are to be measured.

Test Setup: See the Test Procedures below.

Test Procedure: Turn on the calipers, and verify the zero reading. Then perform the steps below to verify the following dimensions:

<u>For Slimline Devices:</u>

Measurement A: The thickness of the device plug tongue shall be 1.23 +- 0.05 mm (Figure 5, section A-A of [2]).

- Perform the measurement indicated below using the outside measurement jaws of the caliper. Perform a measurement sweep along the length of the connector, not just in one place. This will account for any variations in the connector. Record the worst-case measured value as *A*.

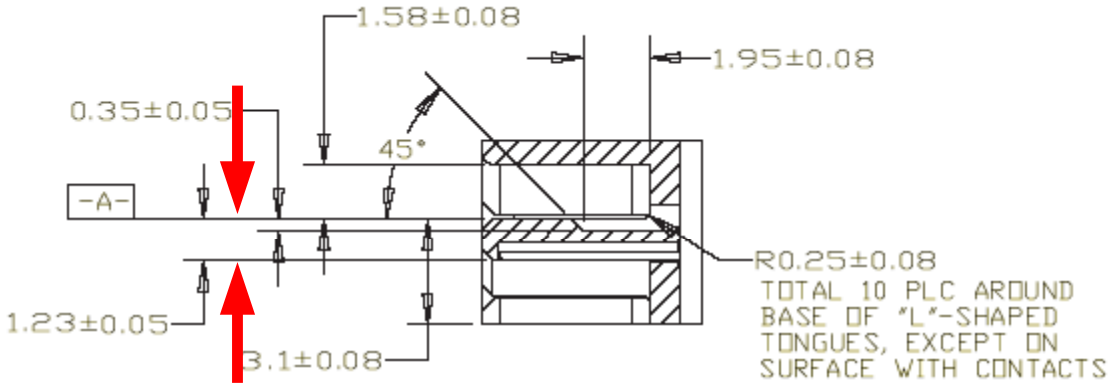

Measurement B: If the "Optional Wall" of Figure 5 is present then the distance from the device plug tongue to the wall shall be 1.58 +- 0.08 mm (Figure 5, section A-A of [2]).

- Perform the measurement indicated below using the inside measurement jaws of the caliper. Perform a measurement sweep along the length of the connector, not just in one place. This will account for any variations in the connector. Record the worst-case measured value as *B*.

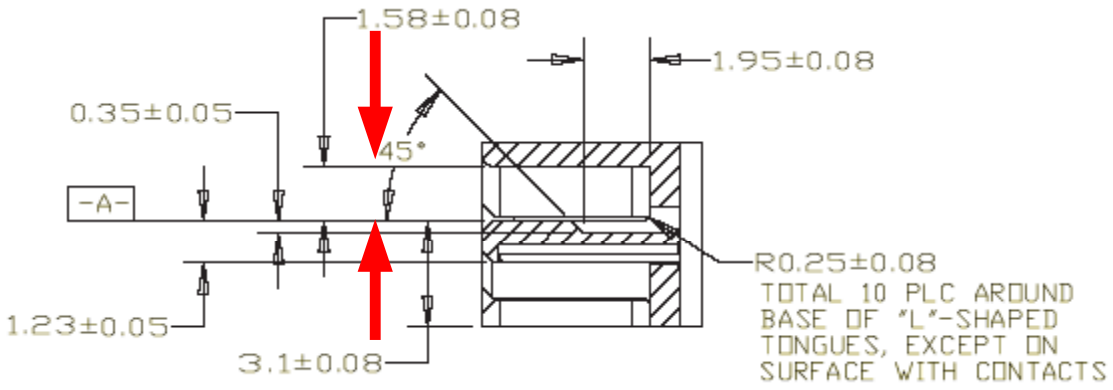

Measurement C: If the "Optional Wall" of Figure 5 is not present then there shall be a minimum of a 1.5 mm keep out zone from Datum A of Figure 5 in [2] to the nearest obstruction.

- Perform the measurement indicated below using the inside measurement jaws of the caliper. Perform a measurement sweep along the length of the connector, not just in one place. This will account for any variations in the connector. Record the worst-case measured value as *C*.

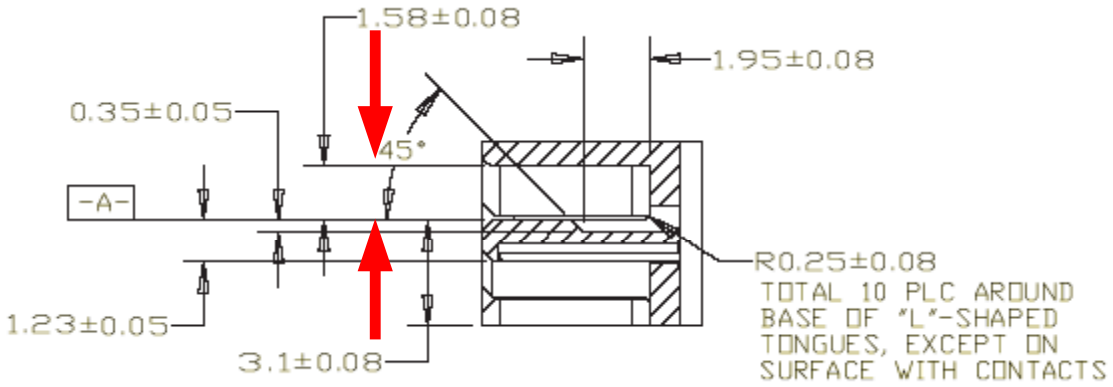

Measurement D: The combined width of the power and signal segments shall be 20.4 +- 0.08 mm (Figure 4) in [2].

- Perform the measurement indicated below using the outside measurement jaws of the caliper. Record the measured value as *D*.

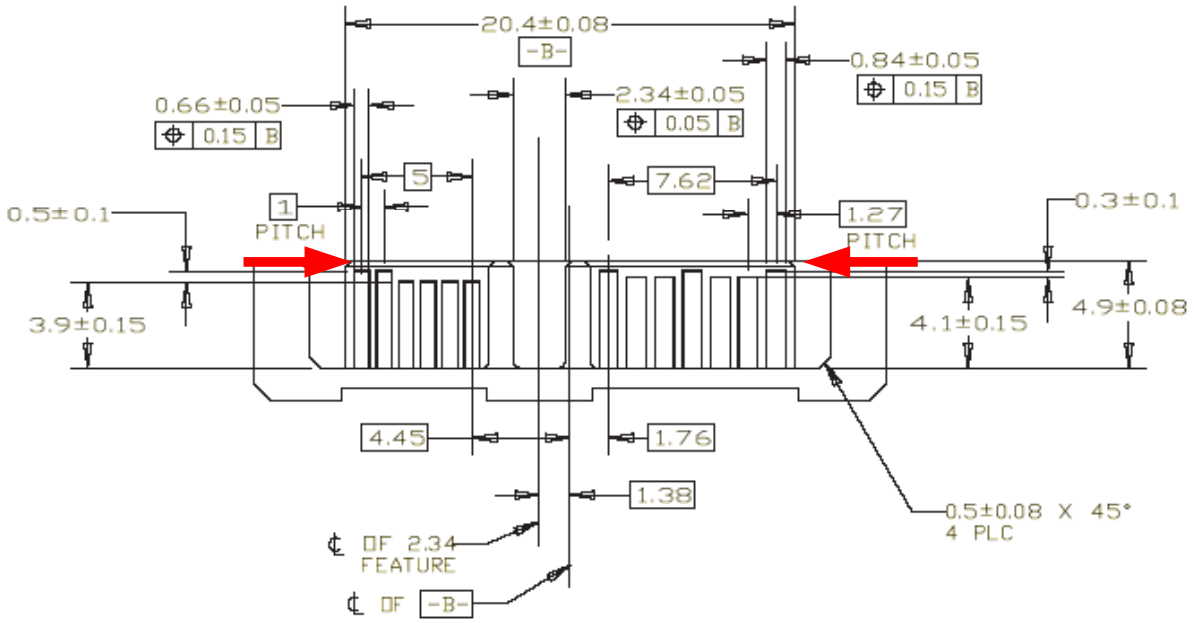

Measurement E: The separation between the power and signal segments shall be 2.34 +- 0.05 mm (Figure 4) in [2].

- Perform the measurement indicated below using the inside measurement jaws of the caliper. Record the measured value as *E*.

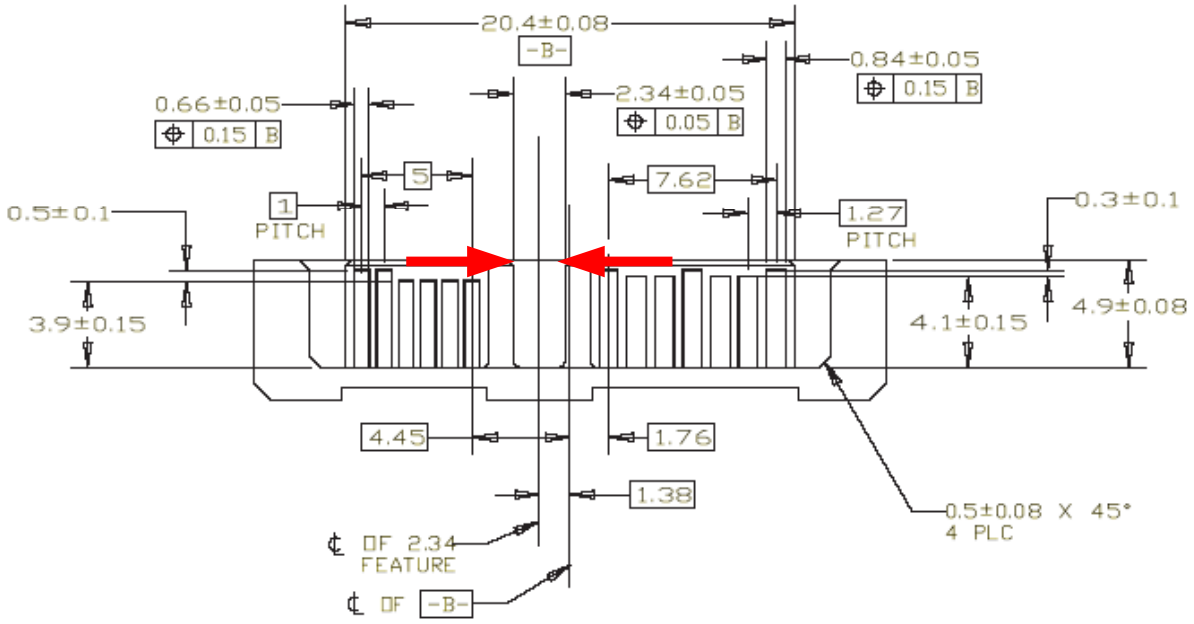

<u>For all other Devices:</u>

Measurement A: The thickness of the device plug tongue shall be 1.23 +- 0.05 mm (Figure 28, section C-C of [1]).

- Perform the measurement indicated below using the outside measurement jaws of the caliper. Perform a measurement sweep along the length of the connector, not just in one place. This will account for any variations in the connector. Record the worst-case measured value as *A*.

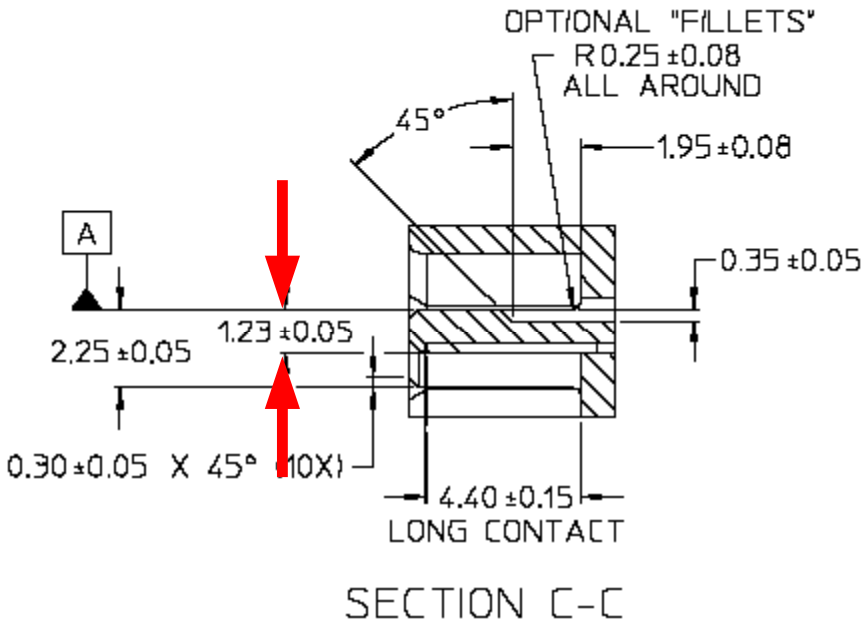

Measurement B: If the "Optional Wall" of Figure 28 is present then the distance from the device plug tongue to the wall shall be 1.58 +- 0.08 mm (Figure 28, section B-B of [1]).

- Perform the measurement indicated below using the inside measurement jaws of the caliper. Perform a measurement sweep along the length of the connector, not just in one place. This will account for any variations in the connector. Record the worst-case measured value as *B.*

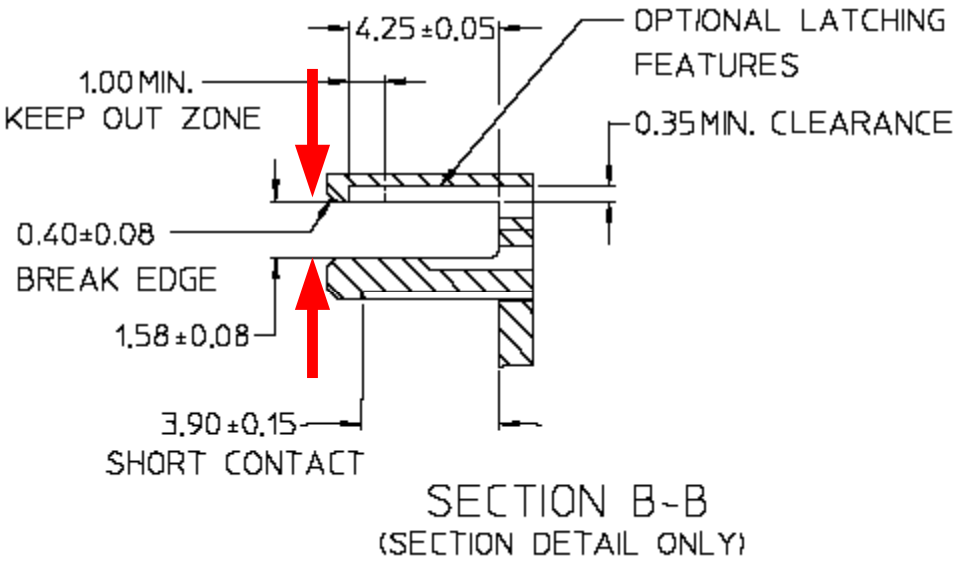

Measurement C: If the "Optional Wall" of Figure 28 is not present then there shall be a minimum of a 1.5 mm keep out zone from Datum A of Figure 26 of [1] to the nearest obstruction.

- Perform the measurement indicated below using the inside measurement jaws of the caliper. Perform a measurement sweep along the length of the connector, not just in one place. This will account for any variations in the connector. Record the worst-case measured value as *C.*

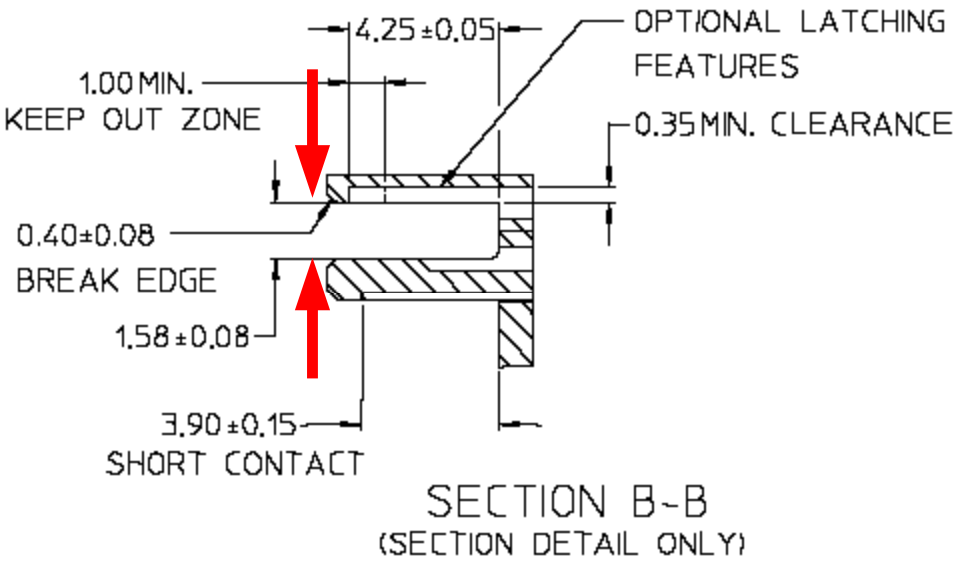

Measurement D: The combined width of the power and signal segments shall be 33.39 +- 0.08 mm (Figure 27 of [1]).

- Perform the measurement indicated below using the outside measurement jaws of the caliper. Record the worst-case measured value as *D*.

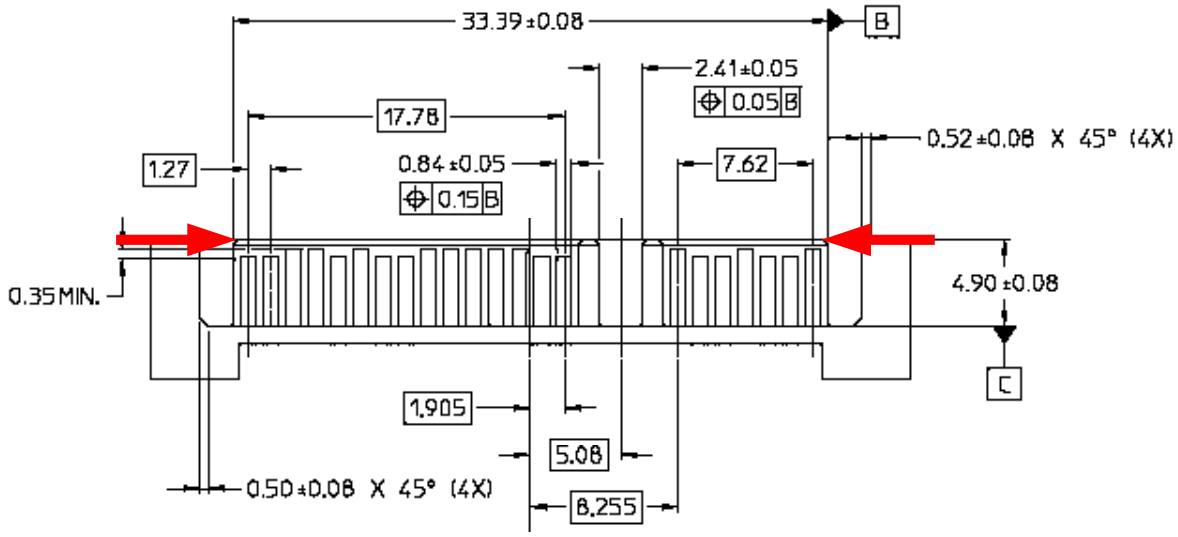

Measurement E: The separation between the power and signal segments shall be 2.41 +- 0.05 mm (Figure 27 of [1]).

- Perform the measurement indicated below using the inside measurement jaws of the caliper. Record the worst-case measured value as *E*.

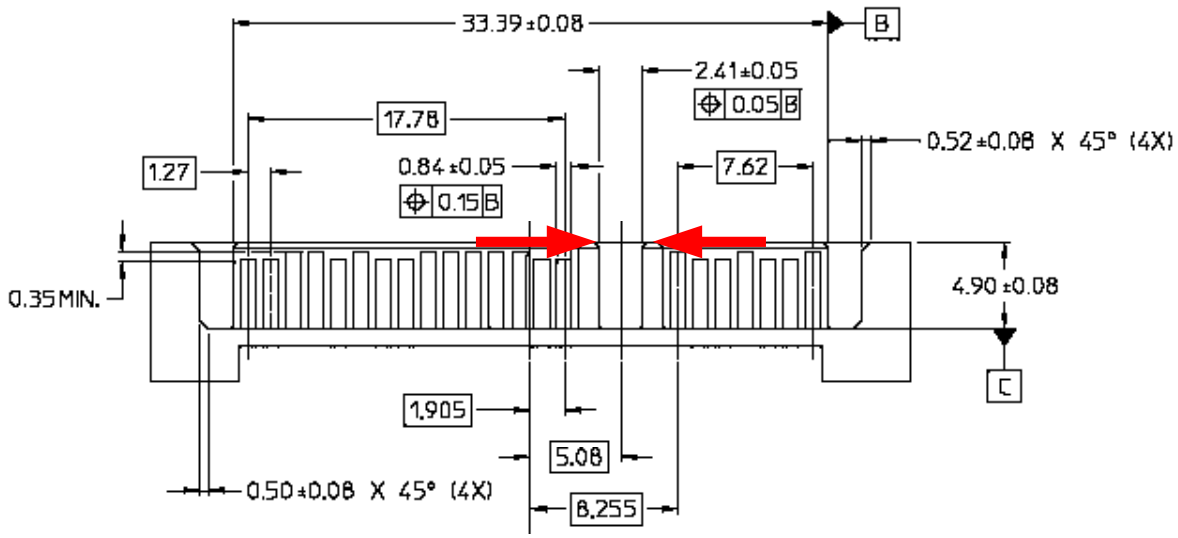

Observable Results:

<u>For Slimline Devices:</u>

a) Verify that Measurement A = 1.23 +-0.05 mm.
b) Verify that Measurement B = 1.58 +- 0.08 mm
c) Verify that Measurement C = 1.5 mm or more if the Optional Wall is not present.
d) Verify that Measurement C = 20.4 +- 0.08 mm.
e) Verify that Measurement D = 2.34 +- 0.05 mm.

<u>For all other Devices:</u>

a) Verify that Measurement A = 1.23 +- 0.05 mm.
b) Verify that Measurement B = 1.58 +- 0.08 mm.
c) Verify that Measurement C = 1.5 mm or more if the Optional Wall is not present.
d) Verify that Measurement C = 33.39 +- 0.08 mm.
e) Verify that Measurement D = 2.41 +- 0.05 mm.

Measurement Tolerance: +/- .01 mm

Possible Problems: None.

Test MDP-01 - Visual and Dimensional Inspections

Purpose: To verify that the device power plug is within the conformance limits.

References:

[1] Serial ATA Revision 2.5 specification section 6.1
[2] Serial ATA II: Slimline Connector Specification Revision 1.0
[3] Serial ATA Interoperability Program Unified Test Document, v1.2, Section 2.9.1

Resource Requirements:

Calipers with

Inner and outer measurement jaws

Note: jaws should have narrow tips, to measure some of the smaller features of the connector.

Resolution <= 0.01 mm
Accuracy of +- 0.001" (+- 0.025 mm) or better
Locking screw to hold the caliper jaws at a fixed location.

Example Calipers are:

Mitutoyo model CD-6"CS, Code 500-196
Mitutoyo model 573-221-10, narrow jaw caliper

Last Modification: April 2, 2007

Discussion: These tests verify that the device connector plug is properly constructed and meets the dimensional specifications of References [1] and [2]. Reference [3] specifies which dimensions in references [1] and [2] are to be measured.

Test Setup: See the Test Procedures below.

Test Procedure: Turn on the calipers, and verify the zero reading. Then perform the steps below to verify the following dimensions:

<u>For Slimline Devices:</u>

Measurement A: The thickness of the device plug tongue shall be 1.23 +- 0.05 mm (Figure 5, section A-A of [2]).

- Perform the measurement indicated below using the outside measurement jaws of the caliper. Perform a measurement sweep along the length of the connector, not just in one place. This will account for any variations in the connector. Record the worst-case measured value as *A*.

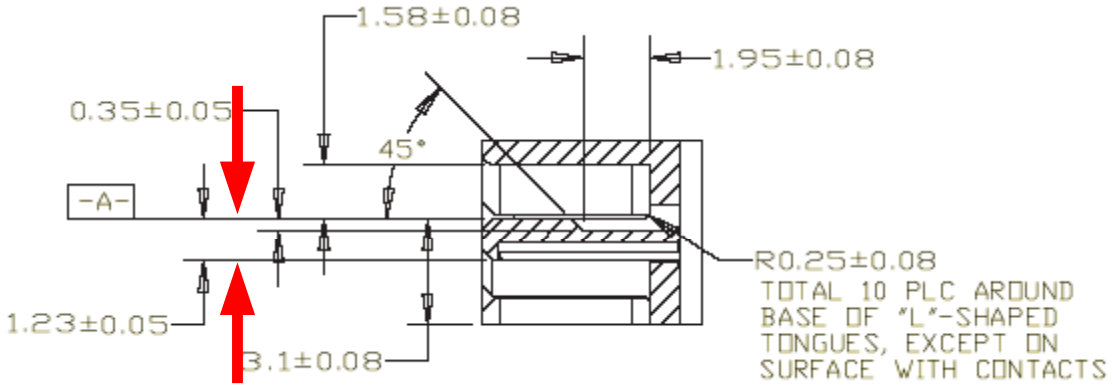

Measurement B: If the "Optional Wall" of Figure 5 is present then the distance from the device plug tongue to the wall shall be 1.58 +- 0.08 mm (Figure 5, section A-A of [2]).

- Perform the measurement indicated below using the inside measurement jaws of the caliper. Perform a measurement sweep along the length of the connector, not just in one place. This will account for any variations in the connector. Record the worst-case measured value as *B.*

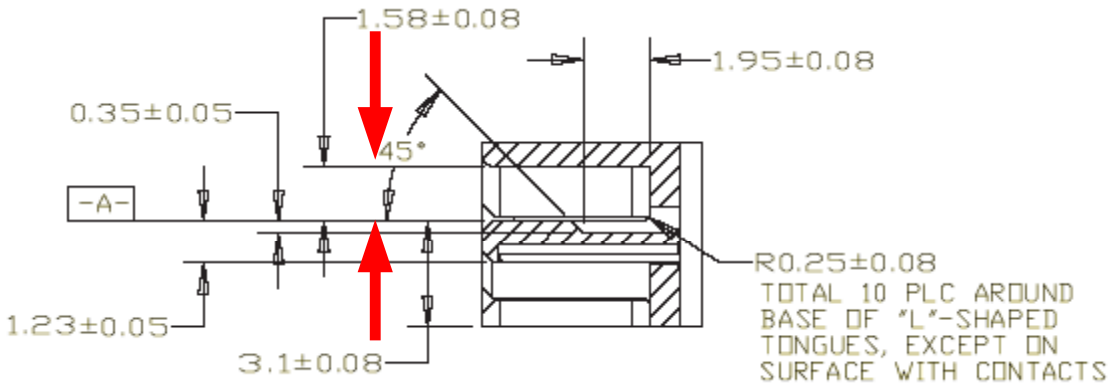

Measurement C: If the "Optional Wall" of Figure 5 is not present then there shall be a minimum of a 1.5 mm keep out zone from Datum A of Figure 5 in [2] to the nearest obstruction.

- Perform the measurement indicated below using the inside measurement jaws of the caliper. Perform a measurement sweep along the length of the connector, not just in one place. This will account for any variations in the connector. Record the worst-case measured value as *C.*

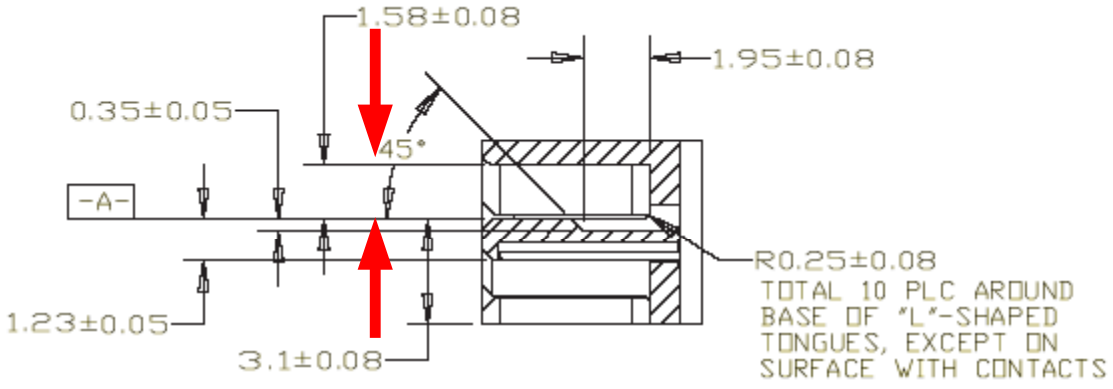

<u>For all other Devices:</u>

Measurement A: The thickness of the device plug tongue shall be 1.23 +- 0.05 mm (Figure 28, section C-C of [1]).

- Perform the measurement indicated below using the outside measurement jaws of the caliper. Perform a measurement sweep along the length of the connector, not just in one place. This will account for any variations in the connector. Record the worst-case measured value as *A.*

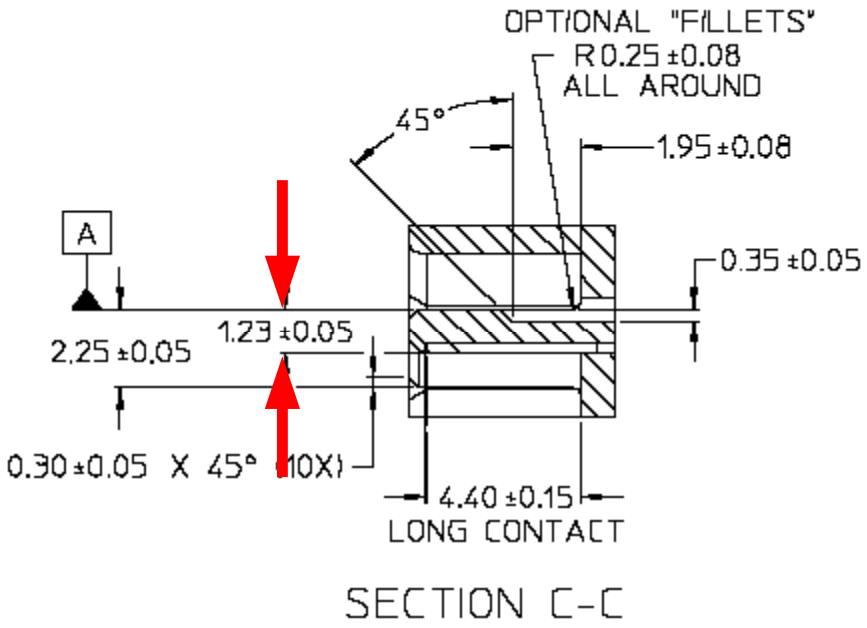

Measurement B: If the "Optional Wall" of Figure 28 is present then the distance from the device plug tongue to the wall shall be 1.58 +- 0.08 mm (Figure 28, section B-B of [1]).

- Perform the measurement indicated below using the inside measurement jaws of the caliper. Perform a measurement sweep along the length of the connector, not just in one place. This will account for any variations in the connector. Record the worst-case measured value as *B.*

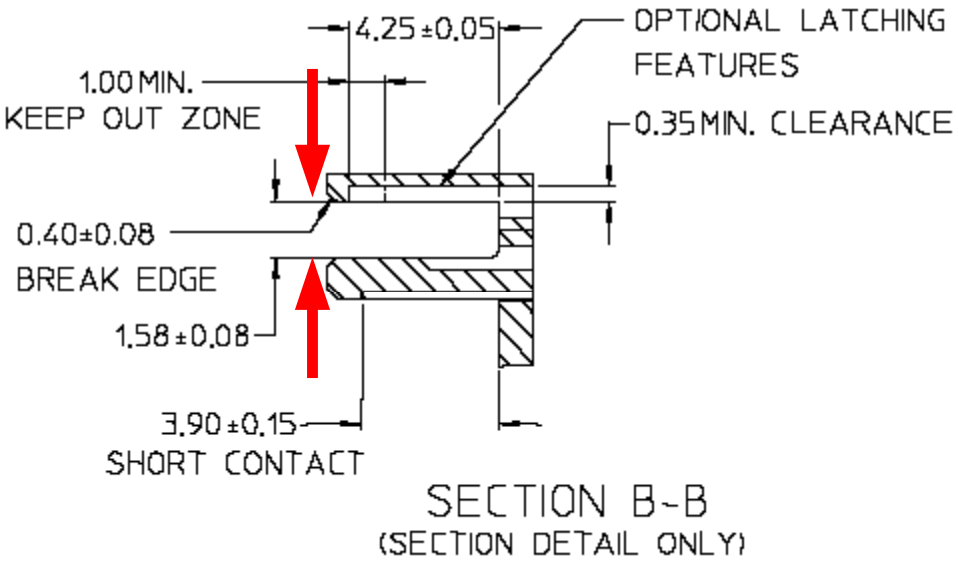

Measurement C: If the "Optional Wall" of Figure 28 is not present then there shall be a minimum of a 1.5 mm keep out zone from Datum A of Figure 26 of [1] to the nearest obstruction.

- Perform the measurement indicated below using the inside measurement jaws of the caliper. Perform a measurement sweep along the length of the connector, not just in one place. This will account for any variations in the connector. Record the worst-case measured value as *C.*

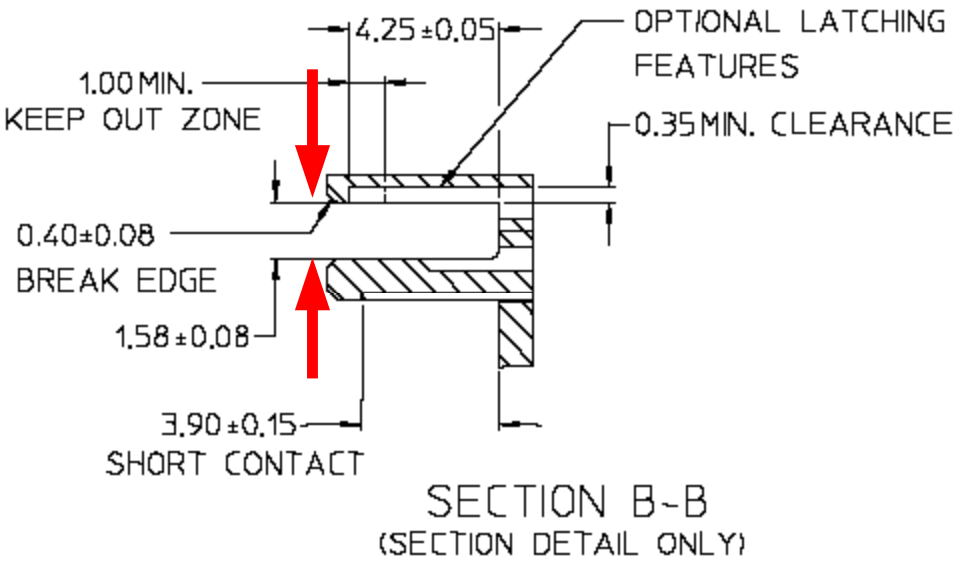

Observable Results:

<u>For Slimline Devices:</u>

a) Verify that Measurement A = 1.23 +-0.05 mm.
b) Verify that Measurement B = 1.58 +- 0.08 mm
c) Verify that Measurement C = 1.5 mm or more if the Optional Wall is not present.

<u>For all other Devices:</u>

a) Verify that Measurement A = 1.23 +- 0.05 mm.
b) Verify that Measurement B = 1.58 +- 0.08 mm.
c) Verify that Measurement C = 1.5 mm or more if the Optional Wall is not present.

Measurement Tolerance: +/- .01 mm

Possible Problems: None.